GUILD ◆ EDITION

# Woodsmith®

Woodsmith.com

Vol. 38 / No. 223

## FARMHOUSE TABLE & BENCH

- Classic Trestle Style
- Unique Distressed Finish
- Simple "Two-By" Construction

## Inside:

**Easy Solutions** for Rust-Free Tools

**The Secret to** Stronger Edge Joints

**Top Clamps for** Tricky Glueups

**Skill-Building Techniques for** your Table Saw, Router & More!

A Publication of Cruz Bay Publishing, Inc.

Woodsmith®

**CREATIVE HOME ARTS GROUP**
**GENERAL MANAGER** Donald B. Peschke
**EDITORIAL MEDIA DIRECTOR** Bryan Nelson
**MANAGING EDITOR** Vincent Ancona
**SENIOR EDITORS** Wyatt Myers, Phil Huber, Randall A. Maxey
**ASSISTANT EDITOR** Robert Kemp

**EXECUTIVE ART DIRECTOR** Todd Lambirth
**SENIOR ILLUSTRATORS** Harlan V. Clark, Dirk Ver Steeg, Peter J. Larson
**SENIOR GRAPHIC DESIGNER** Bob Zimmerman
**GRAPHIC DESIGNER** Becky Kralicek

**CREATIVE DIRECTOR** Ted Kralicek
**ASSISTANT DESIGN DIRECTOR** Chris Fitch
**PROJECT DESIGNER/BUILDER** John Doyle
**CAD SPECIALIST** Steve Johnson
**SHOP CRAFTSMAN** Dana Myers

**SENIOR PHOTOGRAPHERS** Crayola England, Dennis Kennedy
**ASSOCIATE STYLE DIRECTOR** Rebecca Cunningham
**SENIOR ELECTRONIC IMAGE SPECIALIST** Allan Ruhnke
**PRODUCTION ASSISTANT** Minniette Johnson
**VIDEO EDITOR/DIRECTOR** Mark Hayes

**Woodsmith®** (ISSN 0164-4114) is published bimonthly by Cruz Bay Publishing, Inc., 2200 Grand Ave, Des Moines, IA 50312.
**Woodsmith®** is a registered trademark of Cruz Bay Publishing, Inc.
**Copyright©** 2016 Cruz Bay Publishing, Inc. All rights reserved.
**Subscriptions:** Single copy: $6.95.
**Canadian Subscriptions:** Canada Post Agreement No. 40038201. Send change of address information to PO Box 881, Station Main, Markham, ON L3P 8M6. Canada BN 84597 5473 RT
**Periodicals Postage Paid** at Des Moines, IA, and at additional offices.
**Postmaster:** Send change of address to *Woodsmith*, Box 37106, Boone, IA 50037-0106.
Printed in U.S.A.

**WoodsmithCustomerService.com**

**ONLINE SUBSCRIBER SERVICES**
- **VIEW** your account information
- **RENEW** your subscription
- **CHECK** on a subscription payment
- **PAY** your bill
- **CHANGE** your mailing or e-mail address
- **VIEW/RENEW** your gift subscriptions
- **TELL US** if you've missed an issue

**CUSTOMER SERVICE Phone: 800-333-5075 weekdays**

**SUBSCRIPTIONS**
Customer Service
P.O. Box 842
Des Moines, IA 50304-9961
subscriptions@augusthome.com

**EDITORIAL**
Woodsmith Magazine
2200 Grand Avenue
Des Moines, IA 50312
woodsmith@woodsmith.com

ACTIVE INTEREST MEDIA

CHAIRMAN **Efrem Zimbalist III**
PRESIDENT & CEO **Andrew W. Clurman**
EXECUTIVE VICE PRESIDENT & CHIEF FINANCIAL OFFICER **Brian J. Sellstrom**
EXECUTIVE VICE PRESIDENT, OPERATIONS **Patricia B. Fox**

from the editor
# Sawdust

***Chess has been around in some form for*** over 1,500 years. My history with the game only goes back about 40 years, when I played chess and checkers in junior high study hall. Those games were played on inexpensive, well-worn sets. The kind with plastic pieces and a chessboard with red and black squares made from plastic-coated paper veneer over cardboard.

Once I got into woodworking and started seeing handmade chessboards and playing pieces, the thought of making my own chess set crossed my mind. I'll be honest, it's still on my list. But it just so happened that serendipity stepped in a few weeks ago and a package arrived in the mail with an old chess set inside. You can see it in the photo above.

It belonged to my Uncle Ed, who had recently passed away. My Aunt Bev recalled my uncle and me playing on it during an extended stay in their home, so she wanted me to have it. It's a wonderful set, with hand-carved playing pieces. Even the chessboard has detailed carvings (inset above). My aunt didn't know its history, but I'm willing to bet my uncle got it overseas while he was serving in the military. It's a family heirloom I'll treasure in memory of my uncle.

**An Heirloom of Your Own.** If you want to create your own heirloom chess set, check out our latest design on page 30. There's a lot of great woodworking involved in making the veneered chessboard along with the box-jointed case for storing the playing pieces. And don't worry: You won't have to learn any carving. The pieces are the easy part — they're purchased.

**Help Wanted.** Finally, we're looking for an editor to join our staff here in Des Moines, Iowa. If you're passionate about woodworking and would love to write about it as part of our team, please let us know. Just email a cover letter and résumé highlighting your experience to *Professionals@AugustHome.com*. Or if you'd prefer, you can mail it to Human Resources, 2200 Grand Avenue, Des Moines, IA 50312.

Bryan

# contents

No. 223 February/March 2016

## Projects

weekend project

**Turned Canisters . . . . . .20**

Basic stave construction forms the body of each canister. But it's the turned details that really dress things up. A unique lathe mounting system makes the turning a simple task.

shop project

**High-Pressure Veneer Press . . . . . .26**

Applying veneer is always a challenge. The key to success is spreading clamping pressure evenly across the assembly while the glue dries. This press is the solution for doing it right.

designer project

**Elegant Veneered Chessboard . . . . . .30**

This chessboard features stylish box joints at the corners, storage inside for all your chess (and checkers) pieces, and a veneered board you can easily make in your own shop.

shop project

**Rolling Storage Lockers . . . . . .36**

Looking to add more storage? These heavy-duty cabinets pack a ton of storage into a small footprint. And the smooth-rolling wheels provide easy access when stacked side by side.

heirloom project

**Farmhouse Dining Table . . . . . .44**

Built from construction-grade lumber, then distressed and stained, this table would look right at home in any dining room. A matching bench completes the overall look.

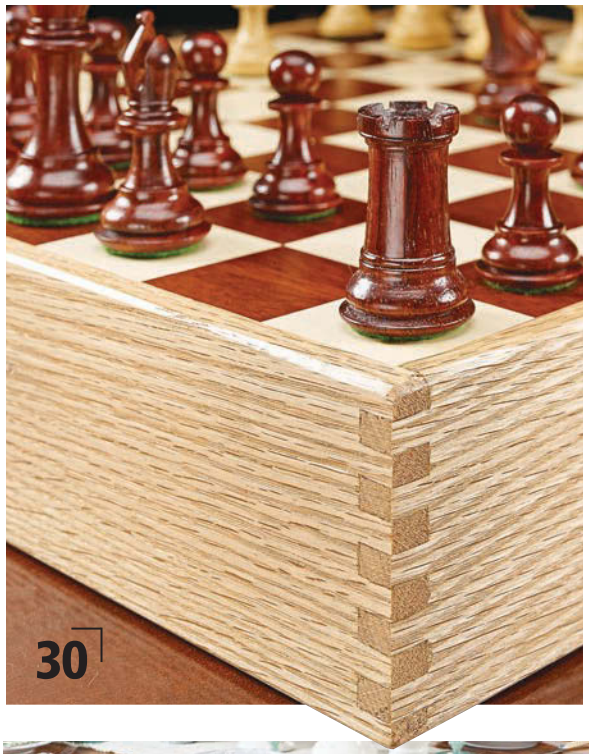

## Departments


from our readers
**Tips & Techniques . . . . . 5**

all about
**Dealing with Rust . . . . . 10**

router workshop
**Splined Edge Joints. . . . . 12**

great gear
**Choosing Corner Clamps . . . . . 14**

woodworking technique
**The Basics of Box Joints. . . . . 18**

woodworking technique
**Tenons at the Band Saw. . . . . 54**

working with tools
**Sanding Drums . . . . . 56**

in the shop
**Great Glueups Made Easy . . . . . 58**

woodworking essentials
**Trimming End Grain . . . . . 60**

mastering the table saw
**Skill Builder: Stopped Cuts. . . . . 62**

tips from our shop
**Shop Notes . . . . . 64**

questions & answers
**Grinding Aluminum. . . . . 66**

from our readers

# Tips & Techniques

## Drawer-Slide Tool Mount

Workbench space is at a premium in my small shop. So permanently attaching bench-mounted tools (like my grinder) in a convenient position at the front edge of the bench is not an option. Instead, I made a simple pull-out platform that allows me to slide my grinder to the front edge of the workbench when I need it. Then I simply slide it back to free up the space for other work (upper inset photo).

The platform is just a few layers of plywood assembled with glue. A hardwood front covers the plywood edges. A pair of full-extension drawer slides are mounted to the sides and platform. The sides are screwed to the workbench. I added a hand-hold in the platform and front fillers for convenience. To hold the platform in place while in use, I installed a couple barrel bolts on the front (lower inset photo).

*Peter Huckstep*
*Albion, New York*

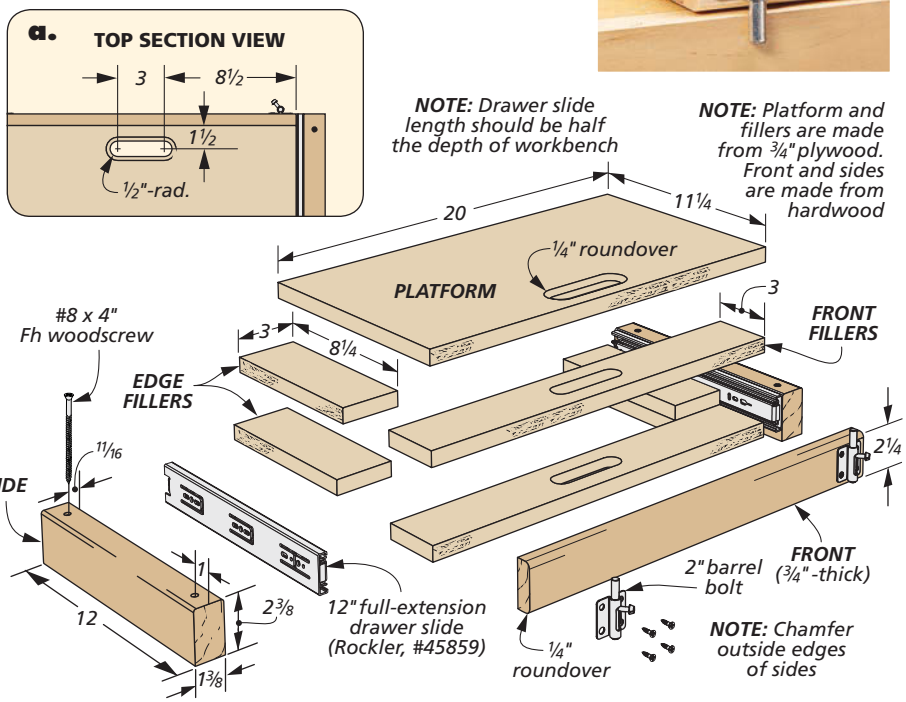


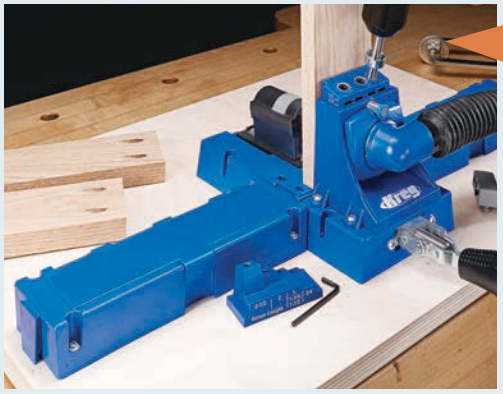

## Win This Kreg K5 Jig

Simply send us your favorite shop tips. If your tip or technique is selected as the featured reader's tip, you'll win a *Kreg K5 Jig* just like the one shown here. To submit your tip or technique, just go online to *Woodsmith.com* and click on the link, "SUBMIT A TIP." There you can submit your tip and upload your photos for consideration.

### The Winner!

Congratulations to Gary Mercer, the winner of this *Kreg K5 Jig*. To find out how you can win this jig, check out the information at left.

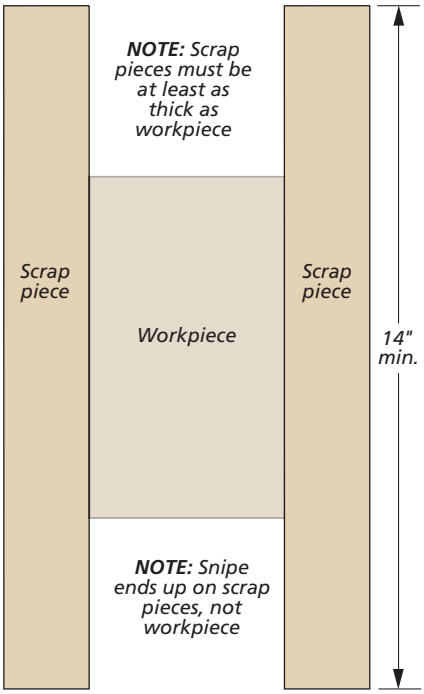


## Planing Short Boards

I can never bring myself to throw away the short hardwood pieces left over from a project, especially if they're exotic or expensive. They're often ideal for small projects. But they typically have to be planed to thickness before I can use them.

The problem is that running a board less than 12" long through some planers isn't recommended. It can get caught between the infeed and outfeed rollers, causing it to lift off the planer bed. At best, this causes severe snipe (a deeper cut near the end of a board). At worst, the board can get chewed up, damaging the cutterhead in the process.

To prevent ruining the board (or my planer), I glue long, narrow scrap pieces to both edges of the piece I want to plane (illustration above right). Inexpensive pine or fir works well here. These scrap pieces span both feed rollers, so the board stays flat on the bed of the planer.

The result is a planed surface that's mirror smooth. If there's any snipe, it ends up on the scrap pieces, not the board. Once the board is planed to the desired thickness, just cut off the narrow scrap pieces at the table saw.

*Roland Romito*
*Broadview Heights, Ohio*

## QUICK TIPS

**Sticky Cap.** *Thomas Melillo* of *La Mirada, California,* was having trouble with the caps on his *Titebond* glue bottles clogging up with dried glue after every use. He discovered that the cap from a *French's* mustard bottle fit perfectly. The plastic nib in the cap seals the bottle without clogging.

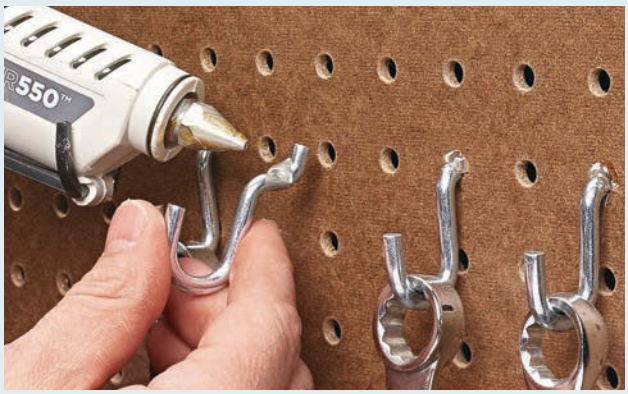

**Pegboard Hooks.** *Michael Rumsey* of *March Air Reserve Base, California,* was tired of his pegboard hooks falling out of their holes every time he grabbed a tool. To solve this problem, he dabs a little hot melt glue near the top of each hook before inserting them in the pegboard.

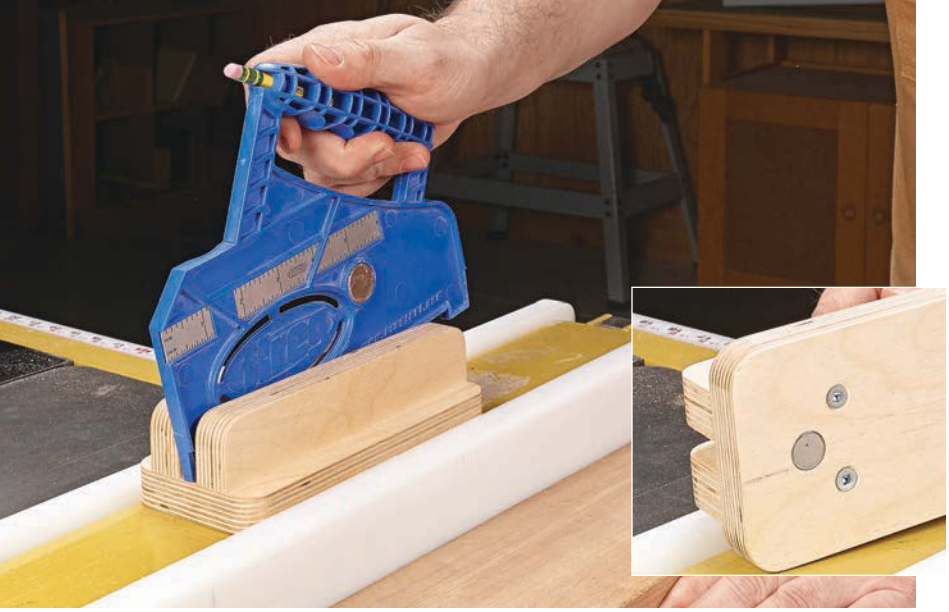

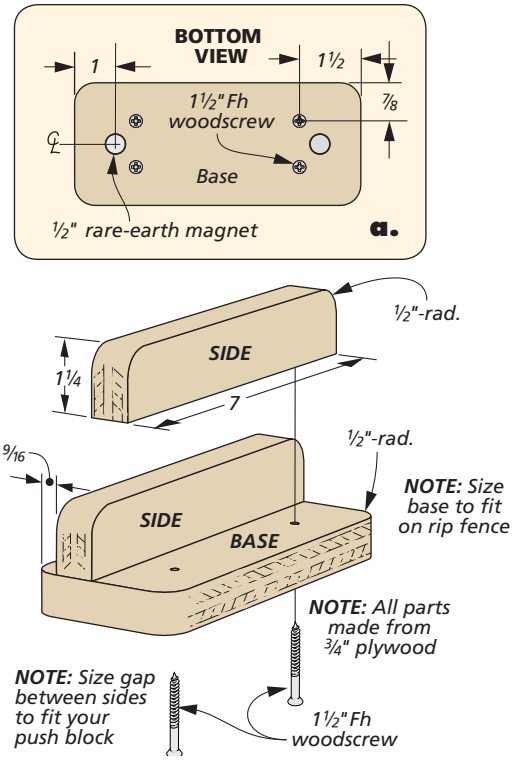


## Push Block Holder

When using the table saw, there's often an awkward moment when I need to pick up a push block midway through a cut to complete the process safely. It seems that no matter how close I position the push block, I occasionally fumble with it when it's lying flat on the saw table.

To solve this problem, I built this push block holder that sits right on top of my rip fence and holds my push block upright where it's easy to grab. It's simply a plywood cradle with a couple rare-earth magnets recessed in the base to hold it in place. Now, my push block is always at the ready without an uncomfortable or unsafe reach.

*Lewis Cobb*
*New Maryland, New Brunswick*

## Sheet Goods Helper

When it comes to breaking down sheet goods, there's certainly no shortage of ways to complete the task. But I was looking for a way that would utilize my *Workmate* bench without cutting into the worksurface. What I devised is the setup you see above.

This method uses a C-channel made from a 2x6 for the base and some plywood scraps that act as risers. The risers are attached to the base with screws. I sized my pieces so they're a couple feet longer than my *Workmate*.

**USING IT.** With the C-channel clamped in the *Workmate*, position the cut line so it straddles the opening and make the cut. A sawhorse or two provide additional support.

*Bob Francesconi*
*Tavares, Florida*


# DIGITAL WOODSMITH

## SUBMIT TIPS ONLINE

If you have an original shop tip, we would like to hear from you and consider publishing your tip in one or more of our publications. Jump online and go to:

**Woodsmith.com**
and click on the link,
**"SUBMIT A TIP"**

You'll be able to tell us all about your tip and upload your photos and drawings. You can also mail your tips to "Woodsmith Tips" at the editorial address shown on page 2. We will pay up to $200 if we publish your tip.

## RECEIVE FREE ETIPS BY EMAIL

Now you can have the best time-saving secrets, solutions, and techniques sent directly to your email inbox. Just go to:

**Woodsmith.com**
and click on,
**"Woodsmith Tips"**

You'll receive one of our favorite tips by email each and every week.

## Handscrew Caddy

Due to their awkward shape and varying sizes, handscrews aren't the easiest shop accessories to store and keep organized. As storage options, I've tried everything from a heavy-duty hook on the wall to tucking them away in a drawer. But neither alternative met my criteria for convenience and order. As a solution, I designed the simple caddy you see here.

**FEATURE PACKED.** The design of the caddy allows it to hold most sizes of handscrews. Plus, it's small enough to carry right to my workbench, using the angled cleats as handles. And the open bottom ensures that it won't fill up with sawdust. But my favorite feature is that it can be conveniently stored out of the way on a wall cleat when I'm done using my clamps.

**SIMPLE BUILD.** The caddy is made entirely from plywood and goes together with butt joints, glue, and screws. You'll want to make sure that the angle on the bottom of the cleats matches the angle on the wall cleat. The wall cleat can be made longer for storing several caddies.

*Gary Mercer*
*Troy, Michigan*

◀ The matching angles of the cleats on the caddy and the wall provide a secure way to hang the caddy.

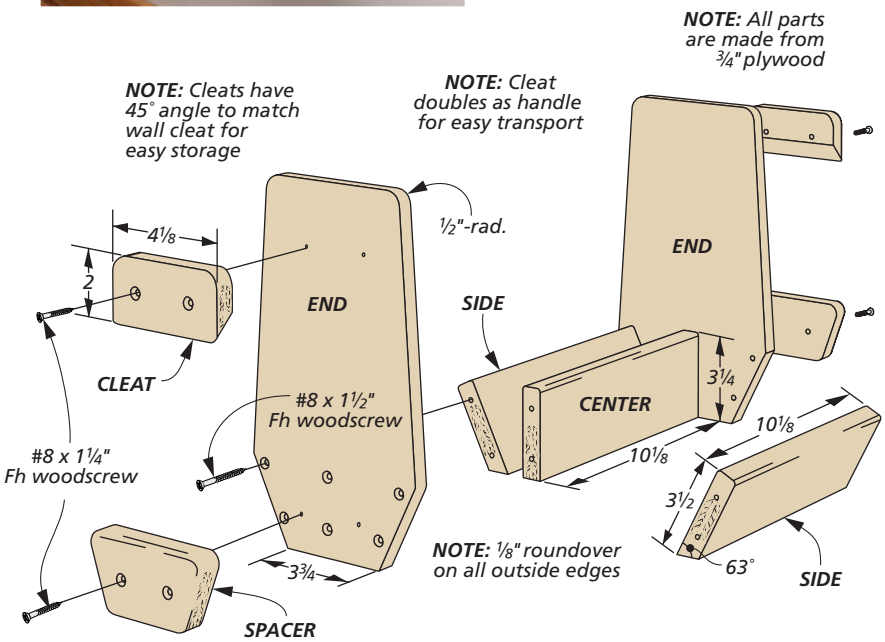


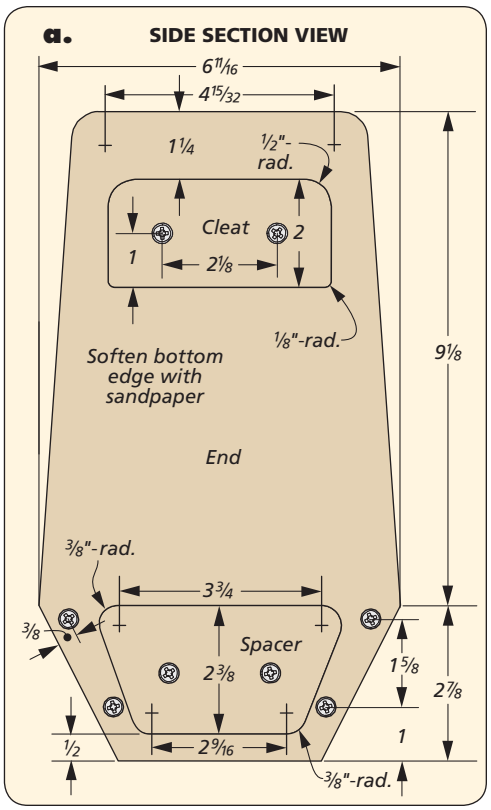

## Drill Press Angle Support

When drilling angled holes, I used to just prop up the workpiece with scrap wood on the drill press table and eyeball the angle until it looked right. Then I was building a complicated coat rack with multiple pegs, and I realized I had a problem.

To improve the accuracy and consistency of my holes, I made this adjustable angle support which has proven useful for many projects. The two pieces are hinged together and held at a fixed angle by a crossbar. The crossbar has dowels on the underside that fit in holes in the base (illustration below). The support can be designed for a single angle, but I made mine adjustable for the most common angles I drill: 5°, 10°, and 15°.

*Percy Blandford*
*Stratford-upon-Avon, England*

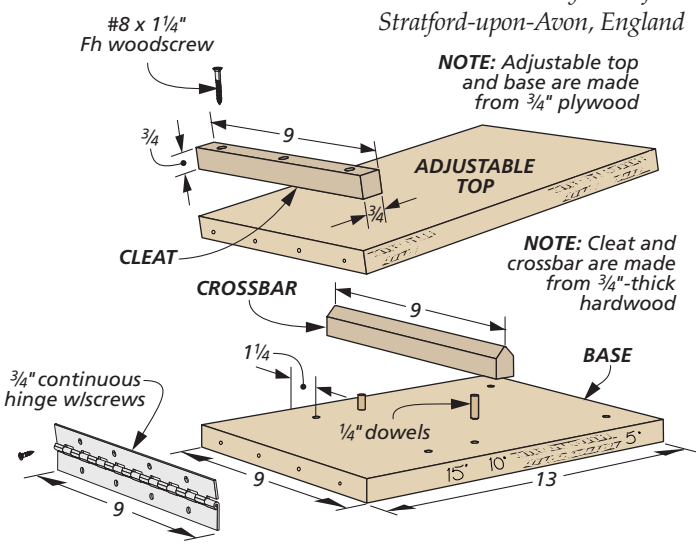


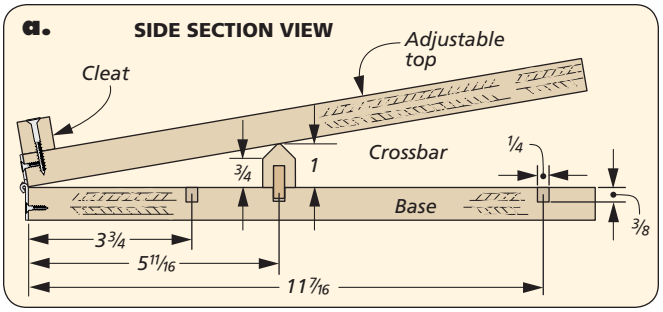


## QUICK TIPS

**Shop-Made Thumbscrews.** Whenever he needs an odd-sized thumbscrew, *Philip Jacobs* of *Saint Paul, Minnesota,* simply makes his own. He threads a bolt into a wire connector as far as it will go and fills the void with epoxy. After the epoxy cures, he cuts off the bolt head.

**Apron Pocket Pencil Holder.** *Mark Manas* of *Merrick, New York,* was tired of pencils falling out of his apron pocket whenever he bent over. To prevent this, he cut a thick piece of corrugated cardboard to fit in his pocket. Simply stab a hole in the edge for a snug fit.

**Setting Honing Guide Angle.** *Alejandro Balbis* of *Longueuil, Quebec,* always found it cumbersome to get his honing guide set at the correct angle. Now he uses a spring clamp to hold his protractor steady, freeing both hands to tighten the guide screws.

all about

simple solutions for

# Rust-Free Tools

▲ Silica gel desiccants can be found in a variety of sizes and styles to match the space you need to protect.

Nothing causes me more distress than pulling one of my favorite hand planes out of my tool chest and finding a light layer of rust forming on the metal. Oxidation, more commonly known as rust, can destroy valuable tools in a relatively short amount of time unless it's dealt with on a continuous basis. And the best way to do that is to take measures to stop the rust before it happens.

Wiping or spraying a rust preventative coating on your tools after every use is certainly an option. But most of us either don't have the time to devote to such a task, or we simply don't always remember. To make my rust prevention measures as easy as possible, I rely on several low-maintenance options to protect the metal tools in my shop drawers, tool boxes, and cabinets.

**METHODS OF WORK.** These easy-to-use rust inhibitors generally work in one of two ways. They either absorb the moisture from the air, or they coat metal tools with a substance that resists moisture build-up. To find out where to buy any of the products in this article, check Sources on page 67. For a couple more options, see the box at the bottom of the next page.

## SILICA GEL DESICCANTS

You've probably found the first style, silica gel packets, included with items you've purchased in the past (left photo). They're added to a wide variety of products to help avoid spoilage or degradation. Although not actually a gel, these packets contain small beads that act as a desiccant to soak up localized humidity from the air. It's very easy to pop a few of these into a tool tote or drawer next to your metal tools and leave them to quietly do their job.

**REUSABLE.** One of the nice features about silica gel desiccants is that they can be reused. When the beads in the packet or

▲ VCI-infused bags are the perfect solution for storing wood-handled planes.

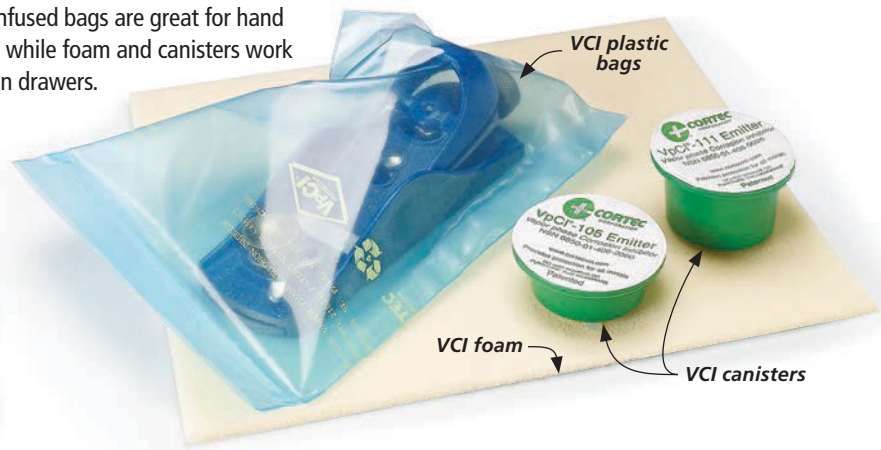


► VCI-infused bags are great for hand tools, while foam and canisters work well in drawers.

container become saturated with moisture, they can be reactivated by drying them in the oven. You'll want to follow the manufacturer's instructions for this process to ensure the correct temperature and duration.

**REACTIVATION SIGNAL.** Some of these products even come with a color-coded indicator that lets you know when they need to be reactivated. A couple examples are shown in the lower left photo on the previous page.

Available in various sizes, there's probably a silica gel container or packet that's just right for the space where you need moisture protection. But also note: You'll want to be careful using them around tools with wood handles and knobs. These tool parts need to retain some moisture to prevent them from drying out and cracking.

### VCI OPTION

One alternative that can be used worry-free with wood-handled tools is vapor phase corrosion inhibitors. Products with these chemicals (VCIs or VpCIs) emit a harmless vapor that coats metal parts and forms a barrier against moisture. These vapors won't harm wood.

Additionally, VCI-infused products take on a variety of forms. From canisters to foam pads and drawer liners (main photo, previous page), there's a style to meet just about any need. Several other types are shown in the photo above. There's even a model specifically designed for protecting hand planes (upper left photo).

**SPACE SPECIFIC.** Much like silica gels, the canister-style VCIs are packaged and sold to protect a certain size area. You simply need to figure out the cubic feet of your space and choose accordingly.

**REPLACEMENTS.** If there's one downside to VCIs, it's their longevity. According to most manufacturers, the majority of VCI products will only last up to a couple of years before the protective qualities dissipate. But the good news is that none of these are very expensive, which makes replacing them fairly painless. W

## More Options: DEHUMIDIFIERS

▲ A *Stack-On* cordless dehumidifier is perfect for pulling the moisture from larger cabinets, like the one shown above.

If you're looking for something with a little more capacity, then try one of these options. This cordless dehumidifier by *Stack-On* (photo at left) can pull the moisture from a tool cabinet up to 100 cubic feet in size. This dehumidifier requires no cords or batteries to operate. Instead, it relies on a powerful silica gel technology to pull moisture from the air. An indicator light tells you when the unit needs to be plugged in to a standard wall socket for a recharge (usually after four to six weeks of operation). The device recharges overnight.

Another option for a large space is a *GoldenRod* dehumidifier. Although it's labeled as a "dehumidifier," the *GoldenRod* is actually a compact convection heater that warms the air in a closed space. This keeps the temperature above the dew point to prevent condensation and stop rust.

▲ *GoldenRod* dehumidifiers are available in several different lengths making it easy to match to your application.

router workshop

tips & techniques for

# Splined Joints

You have to give a lot of credit to the chemists that develop modern wood glues. For most joinery applications, a strong glue is all you need. But when gluing up long boards for a tabletop, for example, adding splines to a joint has some important advantages. First, splines can help with alignment of workpieces during glueup. This proves helpful for gluing up a tabletop, as in the farmhouse table (page 44). Splines can also strengthen a joint, especially end-grain or miter joints. They more than double the amount of gluing surface. Cross-grain splines add even more strength since the spline's grain runs perpendicular to the joint line.

▲ Slot-cutting bit sets offer a range of cutters and bearings for cutting grooves of various widths and depths.

**THE TOOLS.** When cutting grooves for splines on the edges of long workpieces, I like to use a hand-held router with a slot-cutting bit (left photo). I prefer a router over the table saw for one important reason — consistency. If a board has any bow or twist, it's difficult to keep it tight against the rip fence on a table saw throughout the cut. A hand-held router with a slot-cutting bit, on the other hand, more easily follows the contour of the board to cut the groove a consistent distance from the top face.

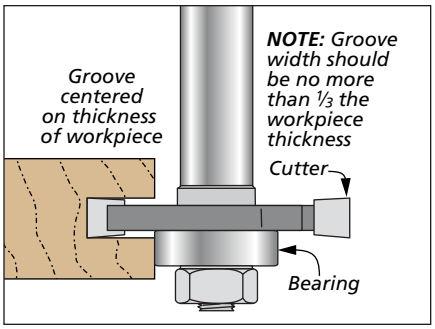


**THE SETUP.** For the best results, start with workpieces that are planed to the same thickness. After laying them out on the workbench for the optimal appearance, mark the top face of each board. You'll cut the grooves with the router riding on the marked face. This ensures the grooves on mating workpieces will align during glueup.

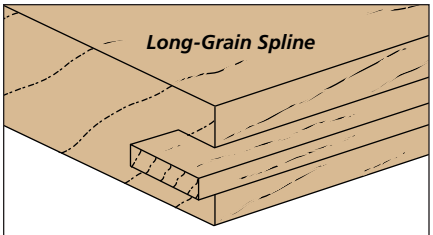


*When simply aligning edges, the spline grain direction is the same as the workpiece*

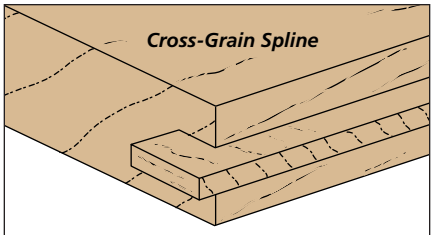


*Where extra strength is needed, spline grain direction is perpendicular to the workpiece grain*

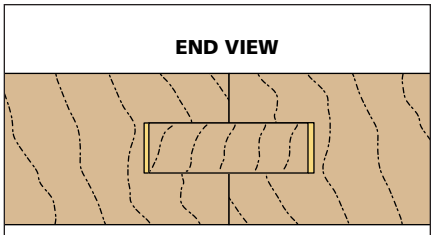


*Cut splines slightly narrower than the width of the groove to allow for glue*

The next step is to install a slot-cutting bit in the router. Some bits come in sets with various cutter widths and bearing sizes. These sets provide the ultimate flexibility for sizing the grooves and splines. You can find out where to buy them in Sources on page 67.

The drawing on the previous page shows the general configuration for setting the bit depth. You'll want to center the width of the cutter on the centerline of the edge of the workpiece. Fortunately, this step isn't too critical since you're routing from the same relative face of each workpiece. But your goal should be to cut the grooves close to the center of the edge.

**CUTTING GROOVES.** The main photo (previous page) shows how to cut the grooves for the splines. I like to securely clamp the workpiece along the front edge of the workbench. You don't want it to slip while routing. To avoid interference with the bearing and arbor on the bit, the workpiece should hang over the front of the workbench slightly. Then rout the groove from left to right.

If your project calls for slots on the end grain of a workpiece, clamp a backer board to the workpiece before routing. This prevents tearout as the bit exits the workpiece at the end of the cut. The article on page 60 provides some more helpful tips for routing end grain.

**MAKING SPLINES.** The drawings above show some important considerations for making splines. If you're using cross-grain splines to provide additional strength, the box below shows an easy procedure for making them. For long-grain splines, the procedure is the same. The only difference is the grain orientation of the blank.

The fit of the spline in the grooves can be the difference between a strong or weak joint. You want a snug, but not too tight, fit in the grooves. If it's too tight, you'll have problems getting the splines to seat in the grooves after you add glue. If the spline fits too loose, you actually provide less surface area for the glue to grab and do its job. A loose spline will also make it more difficult to align the workpieces during assembly. Don't rely on the glue to fill gaps and make up for a sloppy fitting spline.

When cutting the splines to width, allow a little room for glue (upper right drawing). This ensures the joint draws tight without any gaps.

**ASSEMBLY.** Before adding any glue to the joints, it's a good idea to dry-assemble all of the parts first. This way, you can be sure everything will go together as planned. When gluing up the joints, I apply a thin film of glue to the edges of the workpiece and run a bead of glue down the inside of the groove. Use a glue brush to spread the glue evenly and up the sides of the groove. Then insert the splines and add clamps for a flush, rock-solid joint. W

## How-To: MAKING CROSS-GRAIN SPLINES

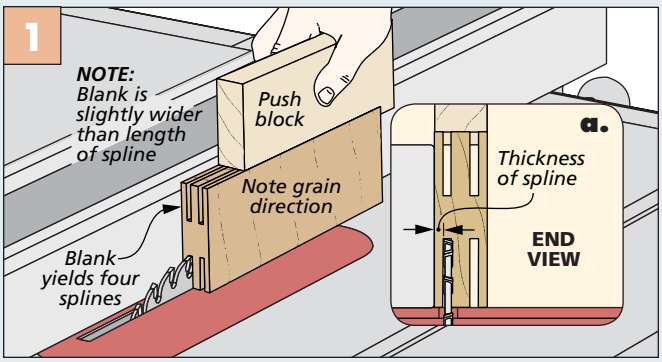


Ripping thin strips at the table saw to create splines can be tricky. It's sometimes difficult to get a consistent thickness.

To get around this problem, start with a thick, extra-wide blank. You can cut several splines from one blank. The best part is, you'll get better results while safely making the cuts.

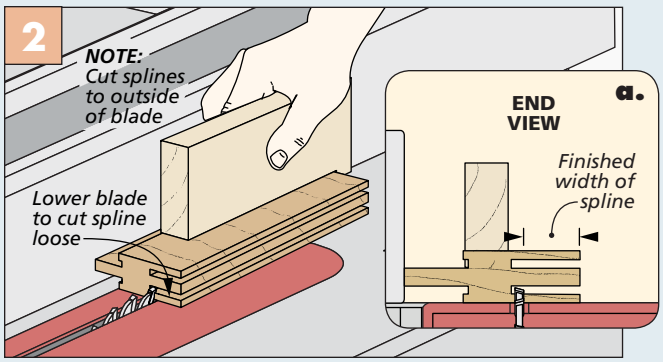


The first cuts are made with the blank oriented vertically. These cuts define the thickness of the splines, as shown in Figure 1. Note the grain orientation of the blank. Then cut the splines to width by making a series of rip cuts, cutting through only one spline at a time (Figure 2).

# great uses for Corner Clamps

Clamping corner joints together is a common operation in almost every woodworking project that you come across. If you create accurate joinery such as miters, dadoes, or rabbets in those corners, then you've accomplished the first step toward perfect assemblies. But sometimes, it takes a little more to draw a joint together so that its alignment is gap-free and square.

If you've ever tried clamping a mitered frame or case with standard bar clamps alone, then you know that this can sometimes be a bit trickier than it should. I've often become frustrated as the miter joints slip out of alignment. Fortunately, clamp manufacturers recognize this frustration, which is why there are several corner clamps available for woodworkers to solve this challenge.

A variety of different styles and types of clamps are designed for handling corner joints. They range from right-angle clamps made specifically for clamping 90° corners, to band clamps that can adjust to clamp any mitered angle, and many more. It helps to have an understanding of how they all work, so you can choose the right ones for your projects. (For sources for all the clamps in the article, refer to page 67.)

## RIGHT-ANGLE CLAMPS

With most woodworking projects, you'll want the corners to align at perfect 90° angles, so the broadest selection of corner clamps is designed with this task in mind. These types of clamps come in several different styles, with names ranging from corner clamps, to right-angle clamps, to 90° clamps, among some other monikers.

◄ Right-angle clamps support case assemblies, while spring clamps excel at closing miters. Strap clamps adjust for different angles.

▲ The quick-release handle on the *Kreg 90° Corner Clamp* makes assemblies fast and easy. A thumbscrew allows adjustments for thickness.

▲ The *Bessey Angle Clamp* is the standard bearer for corner clamps. Included hold-downs (left) let you secure it to a bench.

Though these clamps differ in names and looks, the basic way they work is essentially the same across the board. Two jaws that rest at 90° with one another are intended to be aligned with the outside edges of the workpieces. Then, a block with a 90° corner can be drawn in toward these jaws to hold the workpieces tightly. The design is simple, and also versatile enough to let you clamp miter joints, butt joints, and rabbeted joints, among others (photos).

**BESSEY.** The old standby in this category just might be the *Bessey Angle Clamp* (upper right photos). *Irwin* and a few other manufacturers make similar clamps. These clamps have a flat, stable base and accommodate workpieces up to 1¾" wide. The openings on either side of the jaws allow the clamps to handle T-joints, as well, where one workpiece passes completely through the clamp (lower left photo). This makes the clamps especially handy for case assemblies. The *Bessey* clamp also comes with a couple of hold-downs if you need to secure the clamp to a work-surface while you're assembling your parts (inset photo above).

**KREG.** The *Kreg 90° Corner Clamp* works in a similar fashion to the *Bessey* but has a bit of a different design. The clamps feature quick-release I-handles, which means it's fast and easy to add them to or remove them from an assembly (refer to the upper left photo). The thumbscrew at the bottom of the handle allows quick adjustments of the jaws for materials of varying thickness.

**ROCKLER.** *Rockler*'s newest offering, the *Clamp-It Corner Clamping Jig*, is specifically designed with case assemblies in mind. The clamps are wide, flat, and stable for supporting the bottom edges of cabinet parts. You can see how they work by referring to the main photo on the previous page.

To use the clamp, you sandwich the case parts between the clamp pads along the back fence and a *Clamp-It Assembly Square* at the front. (The squares are sold separately by *Rockler*.) The square helps to bring the pieces into perfect alignment and also holds them perpendicular with the benchtop. Then, a few turns of the star knobs draw the corners tightly together and holds them while the glue dries.

▲ Both the *Bessey* and *Irwin* angle clamps feature openings near the base of the clamp where the outer jaws come together. This simple addition to the clamps allows them to clamp T-joints, which is handy when adding shelves to case assemblies.

## STRAP CLAMPS

If there's any drawback to the standard right-angle corner clamps, it's that you'll need one for every corner of the project that you're planning to clamp together. Add it all up, and this can be a pricy proposition.

Clamping with straps is a budget-friendly alternative, as you only need one strap to draw an entire frame together. And the way they work is simple: The strap forms a loop that feeds from a center spool of additional strap material. Simply pull out enough strap to go around the perimeter of your project, and then reel in the excess to draw all the parts tightly together.

You can clamp projects using the strap alone, but the corners may have a frustrating tendency to become misaligned as you increase the clamping pressure on the project. That's why many strap clamps designed for woodworking include clamp corners. These simple clips slide along the length of the strap, allowing you to easily line them up with the corner joints on your projects. Many are also flexible, so they can adjust to angles other than 90° as you increase the pressure on the clamp (refer to the photos above).

*Lee Valley* sells a set of clamp corners that you can purchase all by themselves for use with any strap (lower left photo). They feature jaws that adjust in angle anywhere from 30° to almost 180°. These are a handy option if you already have strap clamps. Also, some projects, such as the octagonal box shown in the photo above, require more than four clamp corners. So they're a handy option if you want to buy more clamp corners without purchasing another strap clamp.

▲ When a project has more than four corners, a strap with clamp corners that can adjust their angles is a good choice.

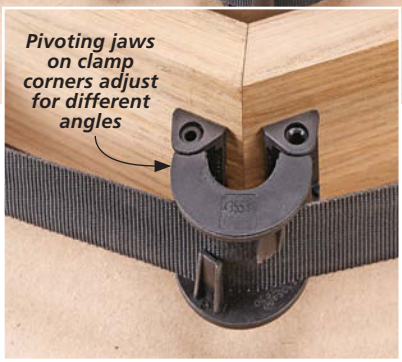


## SOLUTIONS FOR TIGHT MITERS

A few varieties of corner clamps are designed specifically for drawing mitered corners together. One tried and true approach that's been around for decades is the spring clamp.

**SPRING CLAMP & MITER CLIP.** A spring clamp is nothing more than a tightly formed piece of spring steel with sharp points on the ends. The idea here is to spread the points of the clamp apart with your hands or an included pair of pliers, and essentially pinch the miter tightly together with the spring clamp (top left photo on the following page). It's a simple but highly effective method of drawing a miter joint closed.

A variation on the design of the classic spring clamp is the *Miter Clip*. It works like a standard pair of pliers, but instead of steel jaws at the end, it has a pair of sharp points like those on the spring clamps. You just squeeze the handles of the *Miter Clip* to draw the points into the wood. Then slip the tab on one of the handles over the tab on the other handle to lock them together (refer to the top right photo on the next page).

If there's any drawback to these clamps, it's that they leave small indentations where the sharp points come into contact with the surface of the wood. You'll likely need to use a little wood filler to hide the holes before staining and finishing your project.

**FRAMING CLAMP.** Similar to the straps discussed previously, framing clamps are another "all-in-one" solution that pulls together an entire mitered frame using just one product. They're available from several manufacturers and range in capacity. Because of this, it's a good idea to check the clamp's capacity

▲ These *Clamp Corners* that are available from *Lee Valley* are sized to fit on a standard strap clamp. You can purchase them alone for the strap clamps you have, or buy them along with a strap clamp. Refer to Sources on page 67 for these and other clamps in this article.

▲ Sharp steel points on the ends of spring clamps draw miters closed using the pressure of the spring. An optional pair of pliers makes the process more accurate and reduces hand fatigue.

▲ This *Miter Clip* is an alternative to traditional spring clamps. Squeezing the handles draws the sharp points tightly against the corner, and tabs on the handles lock the clip in position.

before purchasing one for your project. (The framing clamps I looked at had capacities of 23" and 45½".)

The design of the framing clamp is pretty easy to understand. They feature four threaded rods and four corners with 90° angles. One end of each rod threads into an insert in one of the corners, while the other end of the rod passes through a hole in the adjacent corner. This is what allows the clamp to adjust in and out.

The other component of the framing clamp is a set of threaded nuts. These nuts are bored in a unique fashion called cross-drilling. This allows them to slide quickly back and forth along the length of the rod. Then, when they butt up against the corners, they engage the rod and can be turned to draw the clamp's corners tightly against the corners of the mitered frame. I found them to be a nice solution for clamping small frames together without the headache of reaching for multiple clamps (refer to the photo at right).

**THE RIGHT CORNER CLAMP FOR YOU.** Any of these corner clamps would provide a fine solution to the challenge of clamping a corner together on your project. Really, choosing the right one comes down to knowing what types of projects you build most, whether it's small frames, large frames, or cases.

There are also a few clamping accessories available that will make the ordinary bar clamps you already own more adept at clamping corners. You can learn more about these accessories in the box below. W

▲ Framing clamps feature quick-release nuts that allow the clamp to adjust easily to frames of different sizes.

## How-To: CLEVER CLAMPING HELPERS

*Universal Clamping Blocks* (near right photo) turn bar clamps into miter clamps. By clamping these aluminum blocks near the corners, and then using a third clamp to pull them together, the result is a tight-fitting miter.

Another option is the *Square-It Assembly Square* from *Rockler.* It simply butts into the corner of an assembly and accepts a pair of clamps that hold the pieces in alignment against the square (refer to the far right photo).

▲ These two handy accessories are paired up with ordinary bar clamps to make corner clamping more accurate and efficient.

# easy-to-cut Box Joints

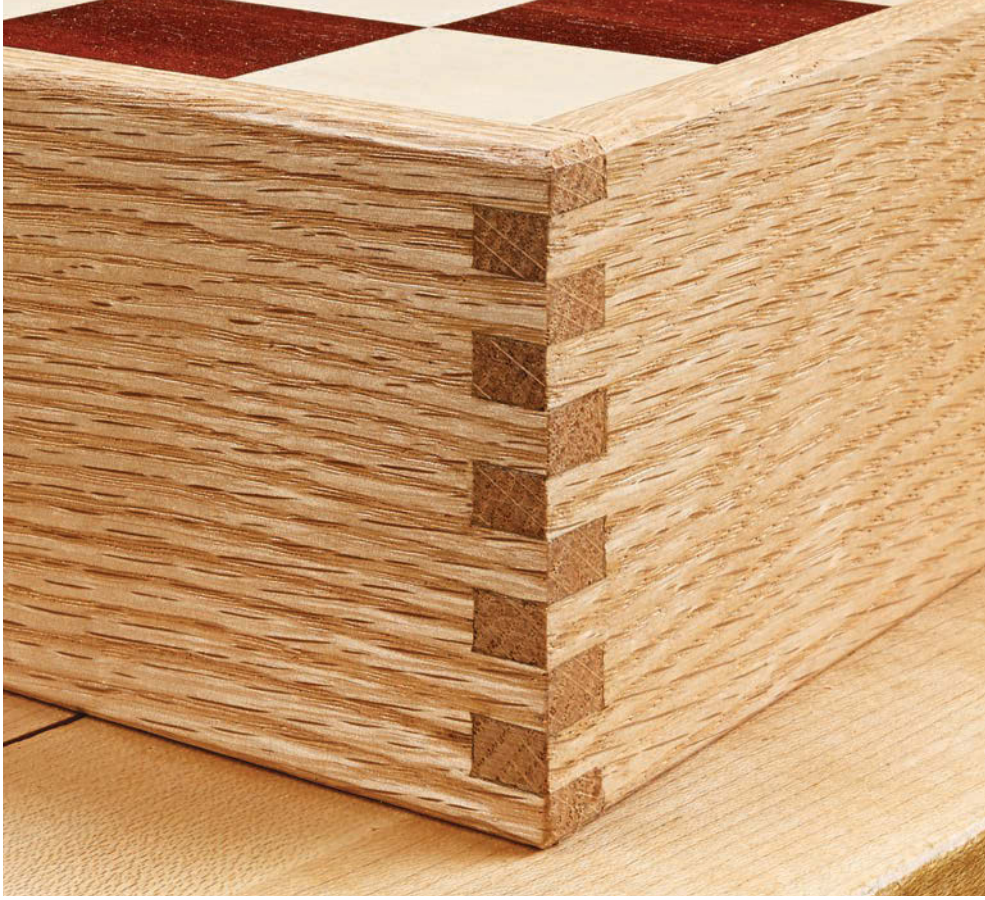

Few types of woodworking joinery offer the ideal combination of strength and beauty quite like the classic box joint. That's why I thought they were an excellent choice for the chessboard featured on page 30 and in the photo at right. If you've never tried your hand at cutting box joints before, there's no reason to be intimidated. Really, all it takes is a basic table saw jig, a dado blade, and the right approach to cut perfect-fitting box joints every time.

**START WITH THE JIG.** Before cutting box joints, you'll need to make a simple jig. The key components of the jig are a fence to support the workpiece as you cut it, and a key that matches the size of the slots you want to cut (drawing below). This key is spaced a distance away from the blade to match the size of the pins you want. This way, you can simply slip a slot over the key to cut the next slot, as shown in the photo sequence on the following page.

I added a couple of other features to this box joint jig for added accuracy. The first is a hardboard base to ensure that the workpieces stay flat and square to the fence behind them. I also added a back fence that's attached to the front fence with screws through oversized holes. This allows you to fine-tune the fit of the box joints using test pieces before moving on to your actual workpieces.

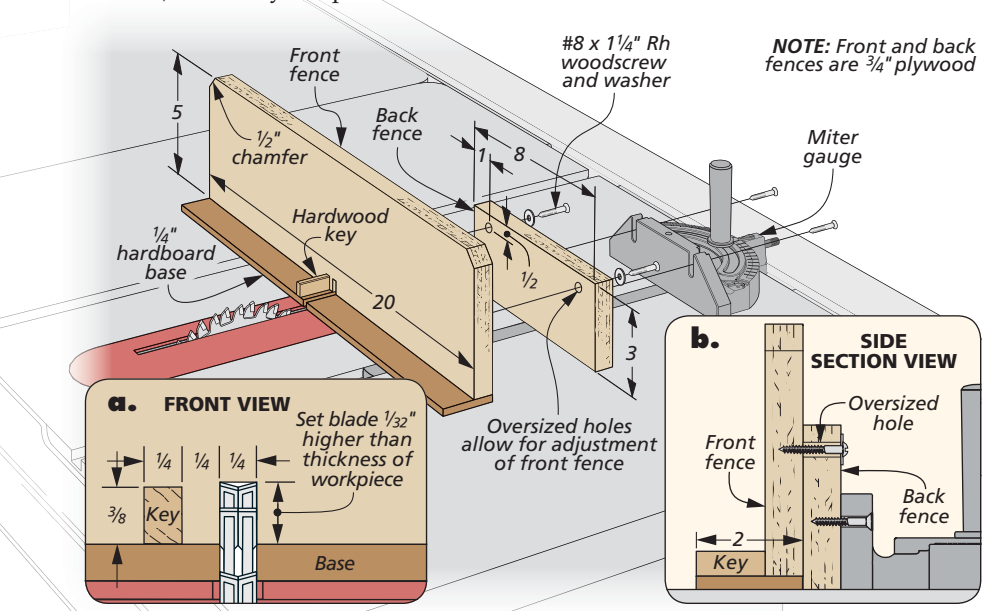


**TEST CUTS.** Speaking of those test cuts, I like to prepare some extra test pieces as I'm cutting out my actual project parts. I'll use these to dial in the fence setting and blade height before I move on to the actual workpieces. You should only need to make a few test cuts using the sequence shown in the photos on the following page to check the fit of your box joints.

Your test pieces should give you some pretty good clues as to what adjustments are needed to get a perfect-fitting box joint. These are outlined in the drawings at the top of the next page. After making test cuts on two pieces, I'll fit the pins and slots together and fine-tune the fence or the blade based on my results. Then I'll make additional test cuts until I get it just right.

**GETTING READY TO CUT.** At this stage, your jig and blade should be set up to cut the actual workpieces. But I have a little checklist of things I go through before I start cutting my project parts. Step one, of course, is to prep my workpieces.

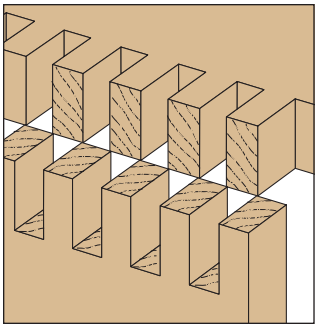

**Pins Too Tight.** If the joints won't go together, move the key toward the blade.

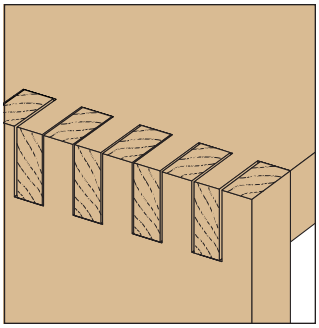

**Pins Too Loose.** If there are gaps between the pins, move the key away from the blade.

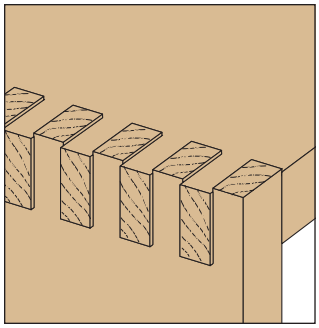

**Pins Too Long.** If the pins protrude too far, you'll need to lower the blade.

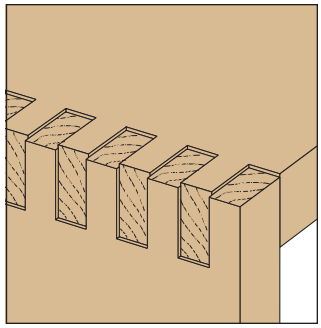

**Pins Too Short.** If the pins are too low, raise the blade to correct the problem.

And while I cut them to final thickness and length as usual, I also like to leave them just a little extra-wide.

The reason for this is pretty simple. With box joints, you may end up just a little bit off your mark near the edges of the pieces, despite your best efforts at fine-tuning the jig and blade settings. So the best way to compensate for that is to start with extra-wide pieces, and then rip them to match up with a full pin or a full slot after the fact. This may create project parts that are a hair narrower or wider than what's initially called for in the project plans. But they'll all match up with one another, and that's the most important objective for your project.

The other thing to do prior to cutting box joints is to label the mating parts. The easiest way to do this is to write a corresponding number in the mating lower corners on both the inside and outside faces of the workpieces. Label the top and bottom edges with 1,1; 2,2, etc. This way, you can cut the parts in sequence. And when you switch from cutting box joints on one workpiece to the next one, all you have to do is match up the numbers to make sure you get it right.

**CUTTING BOX JOINTS.** With all the necessary prep work done, the process of cutting box joints is pretty straightforward. Just make sure you hold the pieces firm and steady as you cut, so you don't end up with a misaligned slot or pin.

You'll start by butting the first workpiece against the key and cutting the first slot (Photo 1). Then it's just a matter of slipping that slot over the key, and proceeding down the line (Photo 2).

When you transition to the mating workpiece, you'll actually flip the piece around (face for face) and place the first slot you cut over the key. This creates a spacer for aligning the first cut on the mating workpiece. Now butt the mating workpiece against it and cut the first slot (Photo 3). You can remove the first workpiece and continue in the same fashion. As discussed previously, you'll cut slots across the full width of the workpieces, and then trim them to final width to match up with a full pin or slot when you're done (Photo 4).

With all the glue surface present with box joints, you don't need much glue to create strong joints. I like to apply a little to the inside of the slots before gluing and clamping up the parts. In the end, the result will be a great-looking, strong box, whether you're making the chessboard on page 30 or another project. W

## How-To: CREATE THE JOINERY

For the first cut, maintain a firm grip to keep the workpiece in position against the fence and tight against the key.

As you move the workpiece after cutting each slot, make sure the bottom edge stays flat against the sled.

Flip the first workpiece around and use it as a spacer while cutting the initial notch in the mating workpiece.

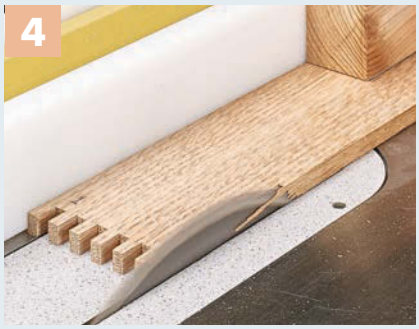


Prior to assembly, rip the waste edge off each piece so there's a full pin or slot on the top and bottom of the piece.

Weekend Project

# Turned Canisters

Whether used for storage or as a table centerpiece, this set of turned containers is the perfect project to give as a gift or display in your home.

Turning wood on the lathe is a very addicting pastime. Sometimes I get so caught up in turning that I neglect the other tools in my shop. That changed when this fun little project came along. While there is certainly some woodturning involved in making this set of decorative canisters, you'll also use several other techniques that will keep you moving around your shop.

The canisters are really nothing more than 12-sided staved cylinders, where the parts are beveled and joined edge-to-edge. The open neck top is shaped on the lathe, and a piece of plywood serves as the bottom. A large cork stopper acts as a lid on the medium-sized container. Since all three canisters use the same

## How-To: SHAPE THE STAVES

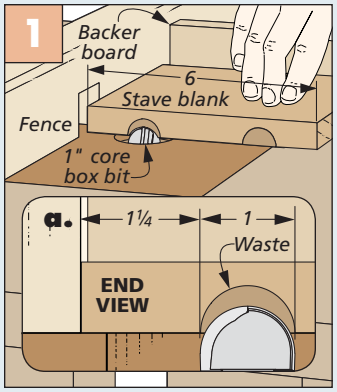


**Form Shoulders.** With the bit lower than final depth, make one pass on each end.

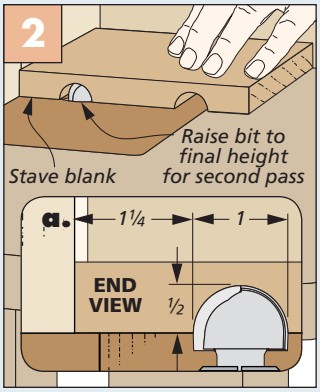


**Final Pass.** Raise the bit to full height and make the final pass on each end.

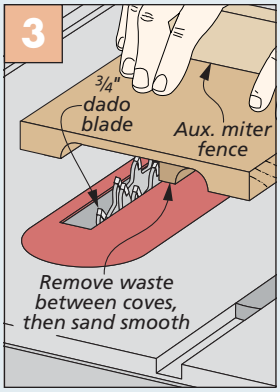


**Remove Waste.** Using a dado blade at the table saw, remove the waste.

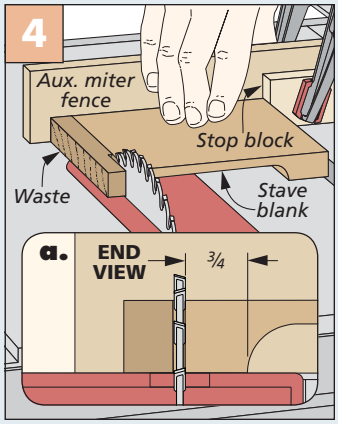


**Trim To Length.** Cut one end of each stave blank to final length at the table saw.

process to construct, I'll focus on building the medium-sized container here. For the utensil holder and shallow bowl dimensions, visit our website, *Woodsmith.com*.

**SHAPING STAVES.** As you can see in the drawings at right, the staves have a dished-out interior. I found it best to do this at the router table and table saw before the staves were glued together. The How-To boxes at the bottom of the previous page shows the process. I'll just point out a few details.

I used wide blanks (6") and cut them a little long (measurement shown in Figure 1 on previous page). The wide blanks let me get three staves from each section. I also cut one extra stave blank to use for test pieces later on.

By making the stave blanks extra long, only one router fence position is needed to define the shoulders of the dished-out area. I made a couple passes with a core box bit to create these (Figures 1 and 2). The rest of the material can be removed at the table saw (Figure 3). I then trimmed the stave blanks to final length, as shown in Figure 4.

## COMPLETE THE STAVES

With the interior face of the stave blanks dished out, I spent a little time sanding the inside face smooth. It's much easier to do this before cutting the staves free from the blanks. The How-To box at right shows the rest of the work to be done on the staves.

**KERF FOR BOTTOM.** First up is a kerf on the inside face of each blank (detail 'b', above). These kerfs house a tongue that's cut on the edge of the plywood bottom later on. A pass through the table saw makes quick work of this cut (Figure 1).

**EXACT WIDTH STAVES.** You can rip the staves free from the blanks (Figure 2), but leave them a little wide (this includes the extra stave blank). The key to tight-fitting joints between the 12 staves is to ensure that both edges of each stave are beveled at exactly 15°. I made these rip cuts at the table saw.

With the blade angle set, use the rip fence as a guide to sneak up on the final width on a test piece, as shown in Figures 3 and 3a. Rip one edge of each stave before flipping them end-for-end and ripping the other edge (Figure 4).

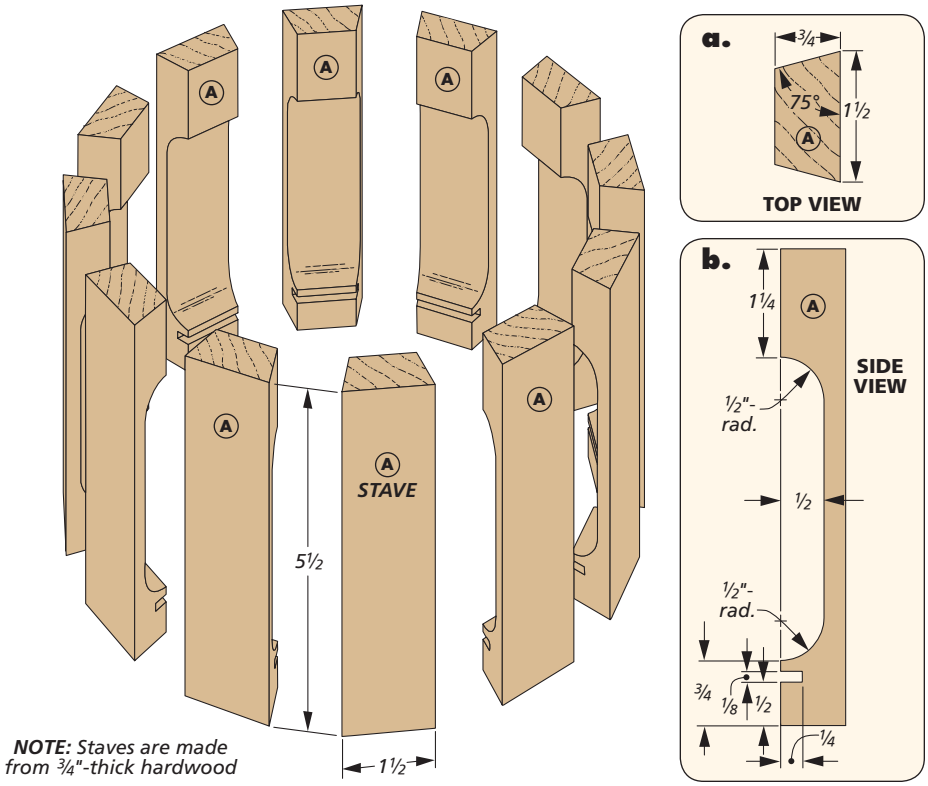


## How-To: CUT KERF & BEVEL STAVES

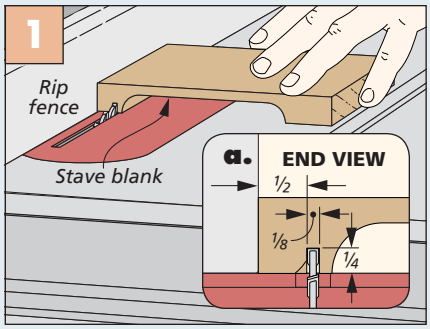


**Cutting Kerf.** Use the rip fence as a guide to cut the kerf on the lower, inside face of each blank.

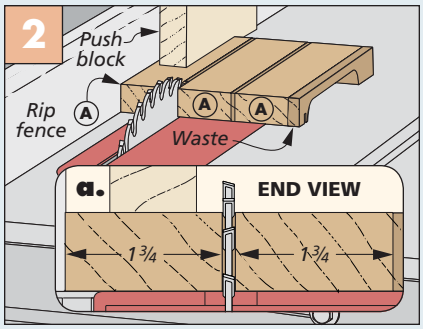


**Rip Wide Blanks.** Rip the staves free from the blanks, but leave them a little wide for now.

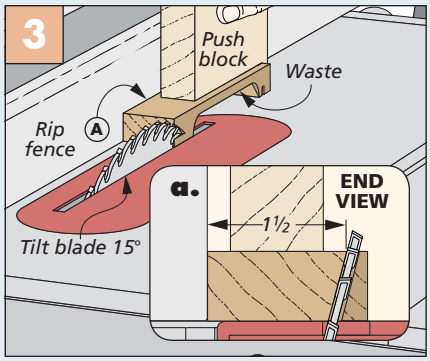


**Bevel Cuts.** Use the rip fence to sneak up on the final width of a test piece. Rip one edge on the rest of the blanks.

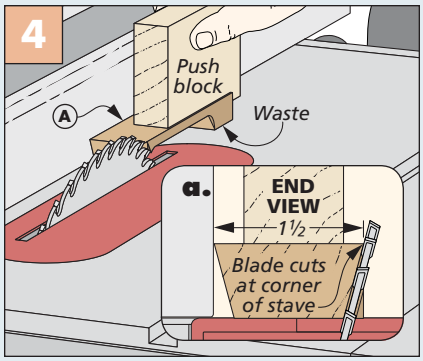


**Final Bevel Cut.** Flip each stave end-for-end and make a bevel cut on the opposite edge.

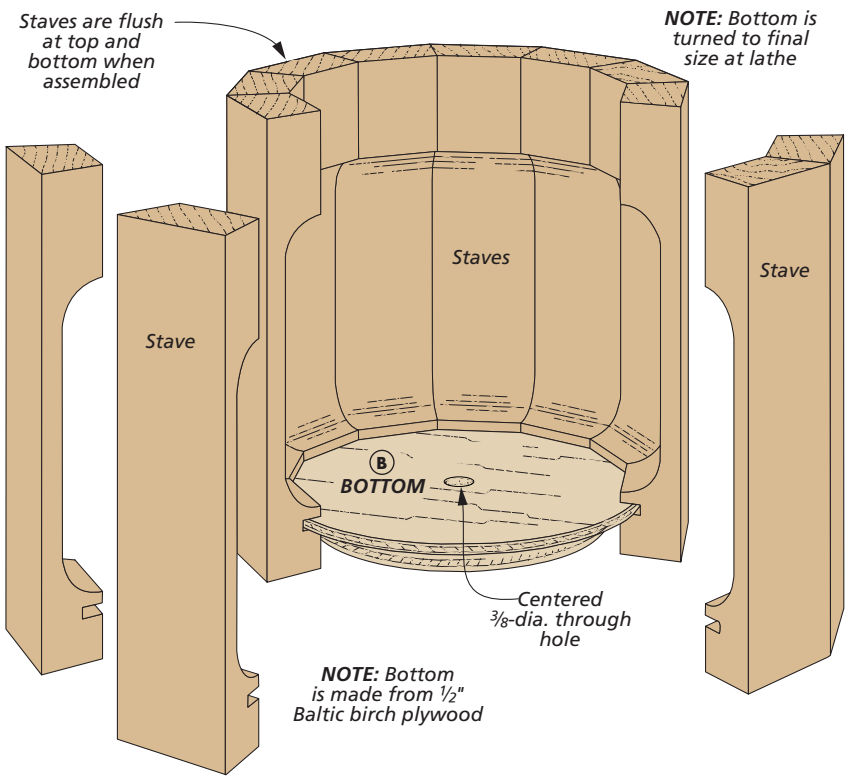


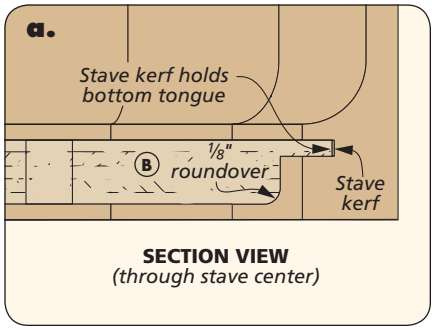


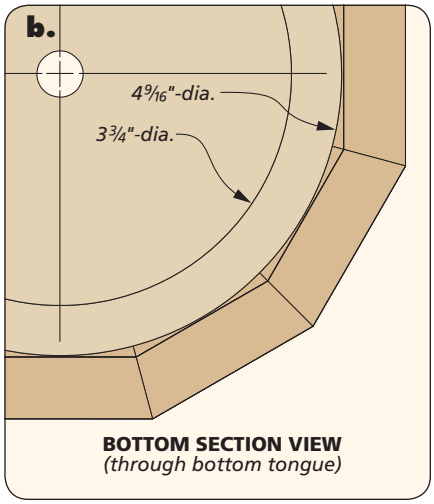


# Assembling the STAVES & BOTTOM

With the shaping work on the staves completed, you can turn your attention to making a plywood bottom. I used Baltic birch for its void-free quality. Before making the bottom, however, you'll need to make a mounting disc for the lathe. This disc attaches to the lathe faceplate and allows you to shape the plywood bottom. After assembling the canister, the mounting disc is used to mount the entire assembly to the lathe for turning the opening.

**MOUNTING DISC.** The How-To box below shows the process for making the mounting disc and attaching it to the faceplate. This same mounting disc can be used to make all of the canisters. Start by finding the center of a

## How-To: PREPARE MOUNTING DISC

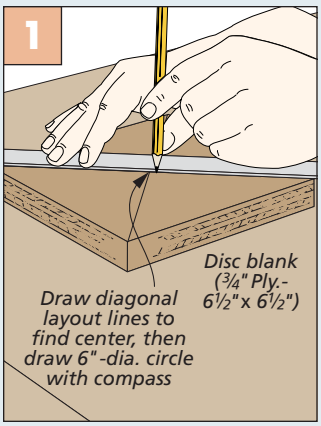


**Find Center.** Locate the center of the mounting disc blank with intersecting lines.

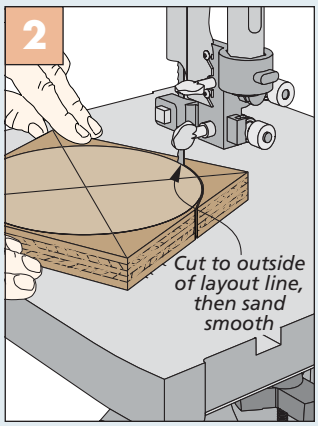


**Rough It Out.** Cut the mounting disc to rough size at the band saw.

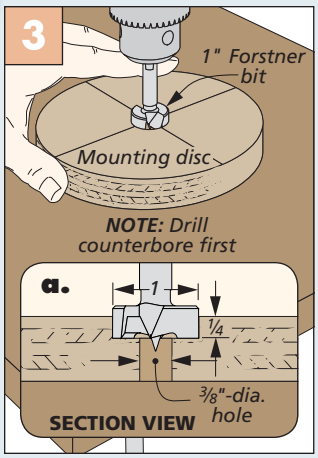


**Carriage Bolt Hole.** Drill the counterbore and center hole at the drill press.

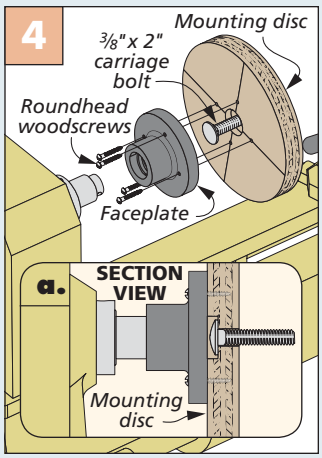


**Faceplate.** Attach the mounting disc to the lathe faceplate with screws.

square blank (Figure 1). It's not critical that the outside edge of the mounting disc be perfectly round, so I just cut the disc out at the band saw, as shown in Figure 2. To accommodate a carriage bolt, drill a counterbored hole in the disc (Figure 3).

After that, it's just a matter of lining up the screw holes in the faceplate with the layout lines on the disc and attaching it with screws. I then installed the assembly on the lathe (Figure 4).

## MAKE THE BOTTOM

The process for making the bottom starts off very similar to the mounting disc. You'll start by finding the center of a square blank, cutting it to rough size at the band saw, and drilling a through hole in the center (Figure 1, at right).

Here's where things are a little different: The edge of the bottom has a rabbet formed around its perimeter. The tongue that's created has to fit inside the kerfs cut in the staves. If the bottom is too big, there will be gaps between the staves come assembly time. If the bottom is too small, then you'll risk having gaps on the inside of the canister where the bottom slips into the kerf. Details 'a' and 'b' on the previous page show what I mean.

**CAREFUL TURNING.** Getting the bottom to the perfect size takes some careful turning and a little patience. This begins by attaching the bottom blank to the mounting disc (Figure 2). Use a square-nosed scraper to turn the bottom round, as shown in Figure 3. Leave it slightly oversized for now. You can sneak up on the final diameter after the rabbet is cut.

Now switch to a parting tool to cut the rabbet that forms the tongue on the edge of the bottom (Figure 4). Check the thickness of the tongue often. When it's sized correctly, remove the bottom from the mounting disc and wrap the staves around the bottom, as shown in Figure 5.

If you left the diameter of the bottom a little big, there will be a slight gap between the staves when you try to close them around the bottom (detail 'a'). Put the bottom back on the lathe and turn just the tongue down until the gaps disappear. Then, all that's left is to round over the bottom edge with sandpaper, as shown in detail 'a' on the previous page.

## How-To: SHAPE BOTTOM & ASSEMBLE STAVES

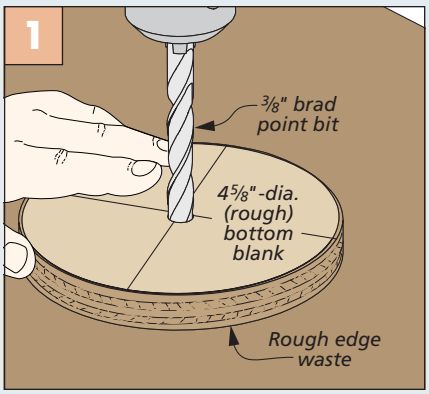


**Drill Center Hole.** After locating the center and cutting to rough size, drill the center hole in the bottom blank.

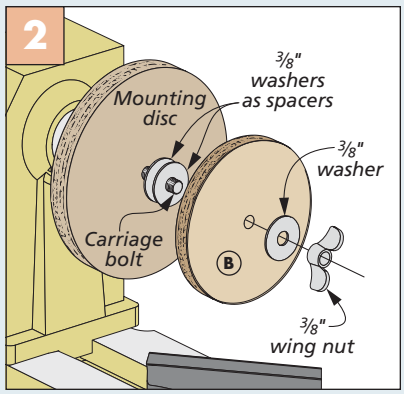


**Attach to Lathe.** With washers acting as spacers, attach the bottom blank to the mounting disc.

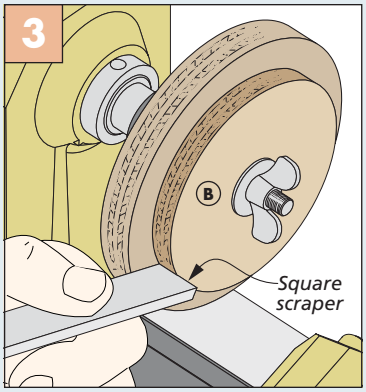


**Round It Out.** Use a square-nosed scraper to turn the bottom blank perfectly round.

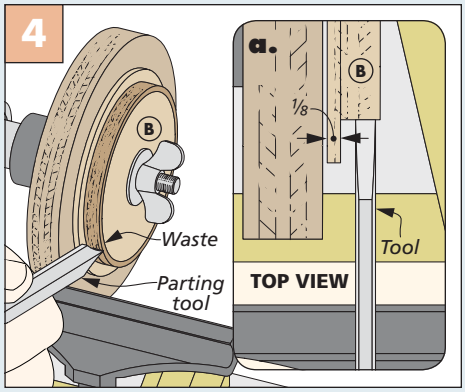


**Form Tongue.** A parting tool works well to cut the rabbet and form the narrow tongue on the edge of the bottom.

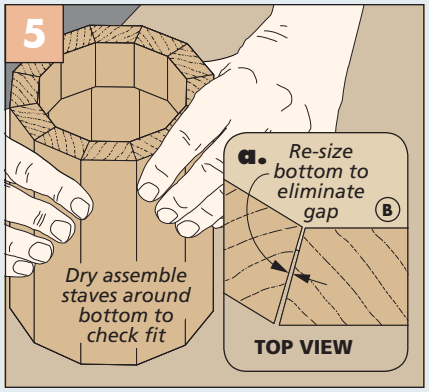


**Test Assembly.** Check the fit often. If a gap remains between the staves (detail 'a'), turn the tongue smaller.

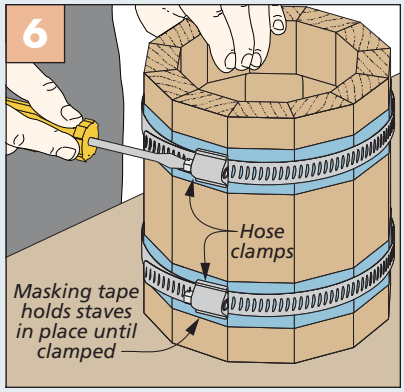


**Final Assembly.** Use masking tape as the initial clamp. A couple of hose clamps provide additional pressure.

**ASSEMBLY TIME.** To assemble the staves, I started by laying out a couple strips of masking tape (sticky side up) and placing the staves edge-to-edge across the strips of tape. (A straightedge helps keep the ends aligned.) After adding glue to the beveled edges and in the kerfs, carefully roll the staves around the bottom to form the cylinder. I added a couple hose clamps using very light pressure (Figure 6). Be sure to clean up any glue squeeze-out on the inside, as well as the outside.

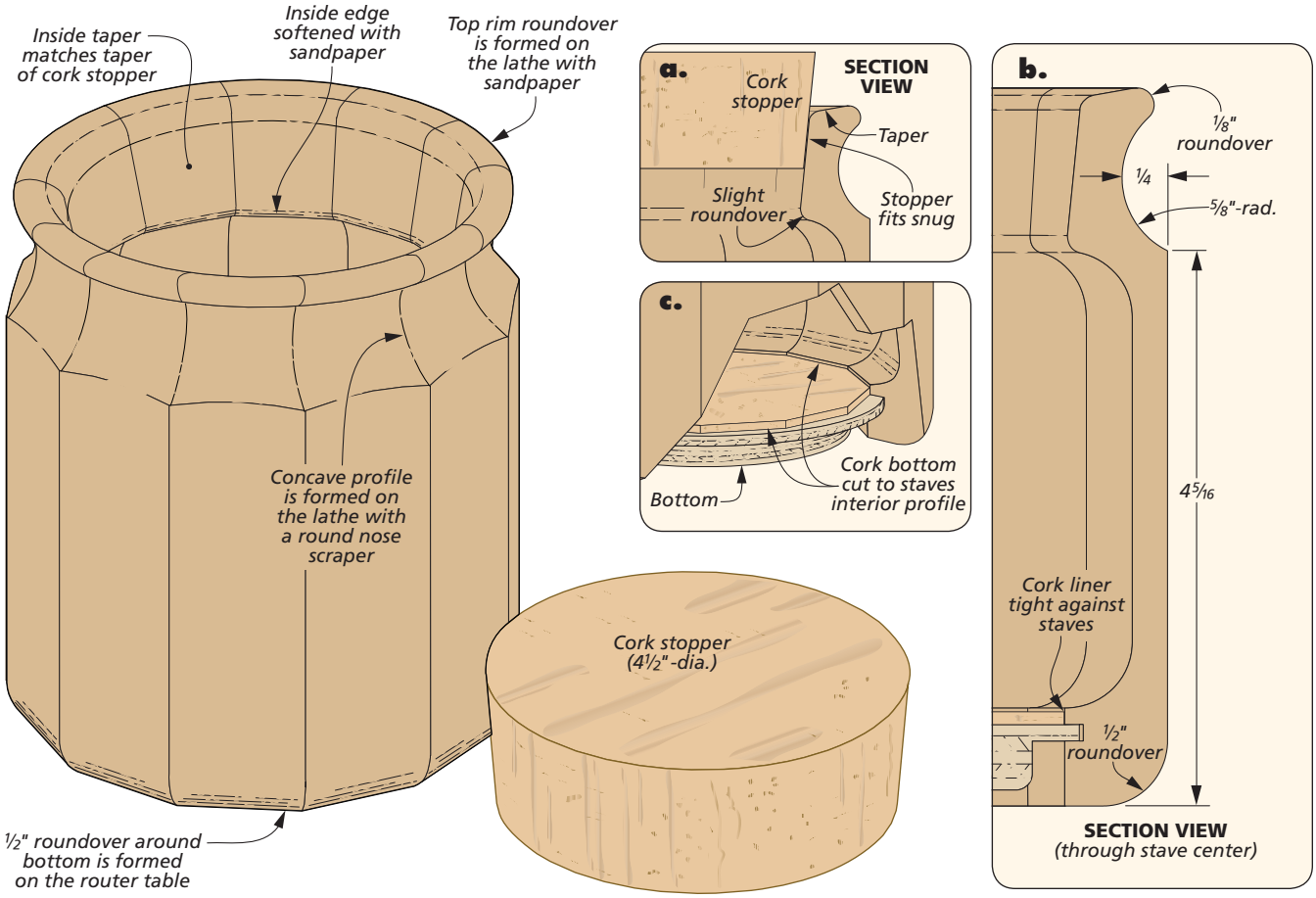


# Shaping & completing the CANISTER

The glued-up canister is starting to look a lot more like the finished product. But there are just a few more details to take care of. This includes forming the neck and rim of the canister on the lathe and sizing the opening for a purchased cork stopper to fit in place. The bottom edge gets rounded over at the router table, and a thin piece of cork is cut to fit inside to cover the plywood bottom.

**MOUNT UP.** Start by attaching the canister to the mounting disc you made earlier with the wing nut and washer (How-To box at left). Just a couple of turning rules to note when working with a staved-cylinder on the lathe: First, always use the lowest speed possible when beginning to turn a cylinder. Trying to start at too high of a speed could result in damage to the workpiece. And second, be sure that your turning tools are sharp. Forming the opening of the canister is delicate work, and sharp cutting tools are a must.

**LAYOUT WORK.** Since I wanted to retain the crisp edges on the lower portion of the canister, I began by drawing a pencil line around the outside to mark where the bottom edge of the concave depression begins. To make this mark, measure over from the bottom edge of the container. You'll find this dimension in detail 'b,' above. Then, use a pencil and a combination square to mark this line all the way around the cylinder.

**SLOW & STEADY.** As shown in Figure 1 on the next page, I used a round-nose scraper to gently form the profile on the

## How-To: MOUNT CANISTER IN LATHE

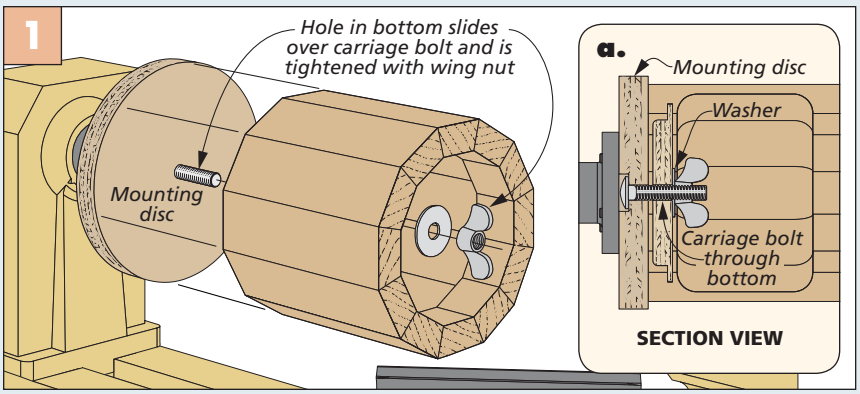


**Attach Canister to Mounting Disc.** Using a wing nut and washer, attach the canister to the mounting disc. This will lock the container in place as the profile is formed around the mouth of the cylinder.

outside, top edge. Take very light cutting passes to avoid chipout near your layout line. Even with a light touch, sharp tools will remove this material very quickly, so be careful not to overdo it.

**FORMING THE LIP.** Moving on to the lip, I used a combination of scrapers and sandpaper to bring this to shape. When shaping the inside edge of the canister, the tool rest should be moved in front of the opening (Figure 2). If you're going to use a cork stopper like the one shown on the previous page, you'll want to have that on hand before tapering the inside of the lip. Remove material slowly and check the fit of the stopper often. The goal is to achieve a snug fit with the cork stopper (detail 'a' on the previous page).

With the opening sized to accommodate the cork stopper, use sandpaper to smooth the outer lip and the sharp edges at the top and bottom of the taper on the inside of the container (Figures 3 and 3a). And before removing the canister from the lathe, I also took some time to do all of the finish sanding on the areas I just shaped.

**ROUT BOTTOM EDGE.** At this point, the bottom edge of the canister is still square and susceptible to chipping. To solve this problem, I chose to round this edge over at the router table. Figure 4, at right, shows the details.

**A CORK BOTTOM.** Since the plywood bottom has a hole in it from being attached to the mounting disc, a suitable solution was needed to cover it up. I decided to use a thin piece of cork to match the lid. But the challenge was cutting it to fit exactly between the staves, as shown in detail 'c' on the previous page.

My solution was to turn the canister upside-down and do a "rubbing" over the bottom of the staves (Figure 5). This profile matches the shape of the inside of the canister. After completing the rubbing, I was able to use that to create a posterboard template. Then I used the template as a guide on the cork sheet and cut it out with a sharp utility knife, as shown in Figure 6.

The cork is held in place with a little glue. To see how I finished my canister set, check Sources on page 67. After that, you can load them up with your favorite snacks or decorative items. W

## How-To: SHAPE CONTAINER & FINISH WORK

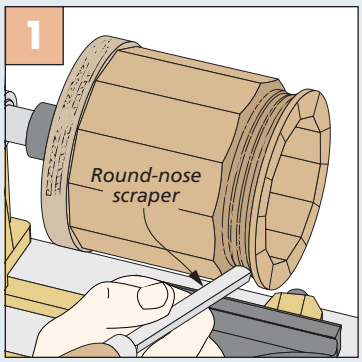


**First Turn.** Start by forming the concave profile on the upper edge with a round-nose scraper.

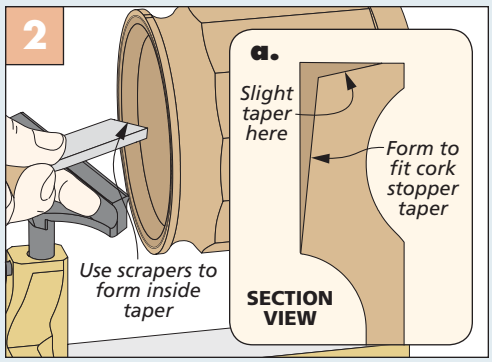


**Form the Opening.** Use a scraper and light pressure to form the lip and inner taper. Check the fit of the cork stopper often.

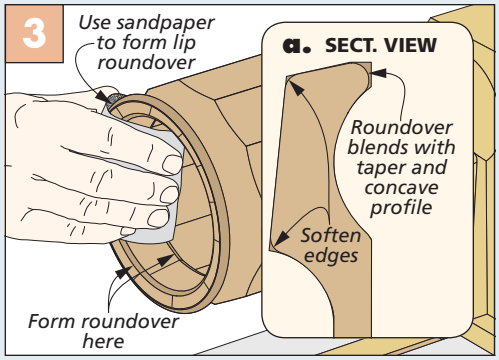


**Finish Sanding.** Sandpaper is all that's needed to break the edges around the lip and at the bottom of the taper.

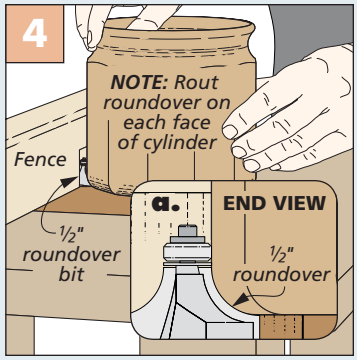


**Rout Roundover.** A trip to the router table makes quick work rounding over the bottom edge.

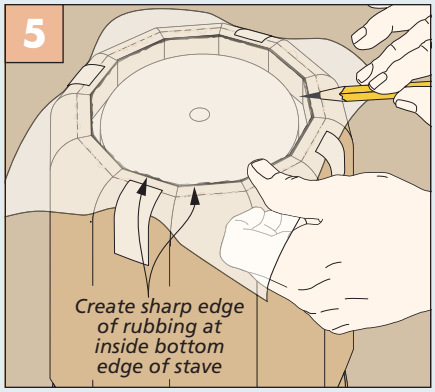


**Rub a Pattern.** Use a piece of paper and a pencil to make a rubbing of the bottom of the canister.

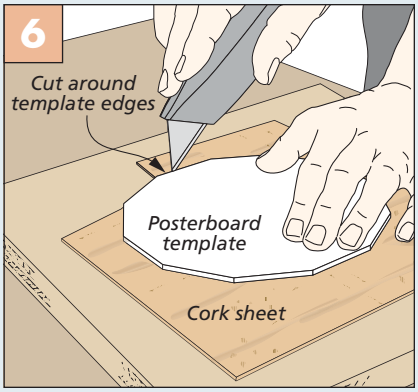


**Cork Liner.** Place the posterboard pattern on the cork sheet and use a sharp utility knife to cut it to shape.

## Materials, Supplies & Cutting Diagram

| | | | |
|---|---|---|---|
| **A** | Staves (12) | ¾ x 1½ - 5½ | • (1) 4½"-dia. Cork Stopper |
| **B** | Bottom (1) | ½ ply. - 5 x 5 | • (1) 12"x 12" Cork Sheet |

*¾"x 6" - 36" Mahogany (1.5 Bd. Ft.)*

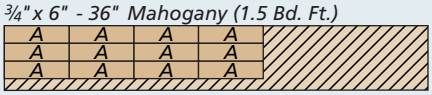


***ALSO NEEDED:** One 12" x 12" sheet of ½" Baltic birch plywood*

Woodsmith GO ONLINE EXTRAS

For information on the bowl and utensil holder, go to Woodsmith.com

Shop Project

# Heavy-duty Veneer Press

Gluing veneer demands clamping pressure distributed across a wide surface. This veneer press ensures you'll always get perfect results.

Adding veneer to a project is a great way to create an eye-catching look without breaking the bank. The chessboard on page 30 is one example. And one of the most challenging aspects of using veneer is applying consistent pressure evenly across the surface as you glue it in place.

**HIGH PRESSURE.** The veneer press you see here more than adequately serves the purpose. There are two big advantages to its design: It's inexpensive to build, and it's more convenient than manhandling a lot of clamps and cauls to get the job done before the glue sets.

The double-layer MDF platens are dead flat and smooth. This means the resulting panel will be smooth with a consistent glue line. A shop-made knob and threaded rod assemblies in combination with thick hardwood cauls create plenty of clamping pressure. All in all, the veneer press is easy to build and yields big benefits while adding another tool to your shop arsenal.

▲ A wrench is the best tool for applying maximum clamping pressure between the platens.

# Flat & smooth **PLATENS**

The two platens on the veneer press are identical. They're each made from two layers of MDF. MDF is flat, smooth, and dense — an ideal combination for a veneer press. You can make the platens any size, but I found the size shown here works well for veneering panels for boxes or small cabinets.

**GLUE & TRIM.** To make each of the platens, start by cutting one layer to final size and rounding over the corners, as shown at right. This layer serves as a template for trimming the second layer flush after it's glued up.

To make the second layer, I cut a piece of MDF about ¼" to ⅜" oversized. This allows a little wiggle room for positioning it on the first layer when the glue and clamps are applied. I glued up both platens and stacked them together on a flat surface with waxed paper between them before clamping them with a series of clamps. You can also make clamping cauls to ensure there's plenty of clamping pressure at the center of the platens. For lack of any other method of clamping, you could simply set a heavy weight, like a concrete block, on top. Once the glue dries, trim the second layer flush on each platen.

**COUNTERBORED HOLES.** Your next step is to lay out a series of counterbored holes along two edges of each platen.

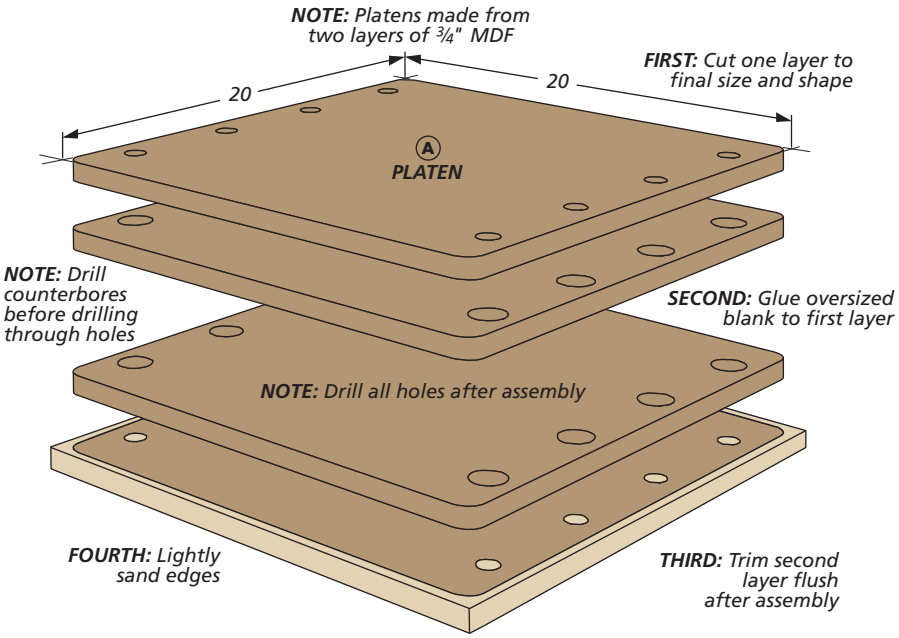


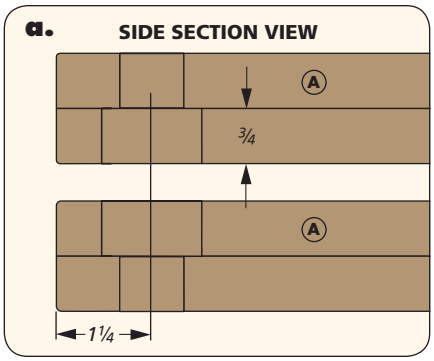


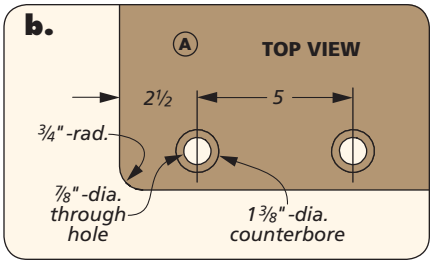


The through holes are oversized to accommodate the threaded rod for the clamping screw assemblies. The counterbores on the inside face of each platen hold springs that help separate the platens, allowing you to insert the workpiece (details 'a' and 'b').

The drawings above and in the box below show where to locate and how to drill the holes. I started by drilling the counterbores with a Forstner bit. Using the centerpoint left from drilling the counterbore as a guide, it's an easy task to follow up with a smaller bit to drill the through hole.

## How-To: COUNTERBORE & DRILL

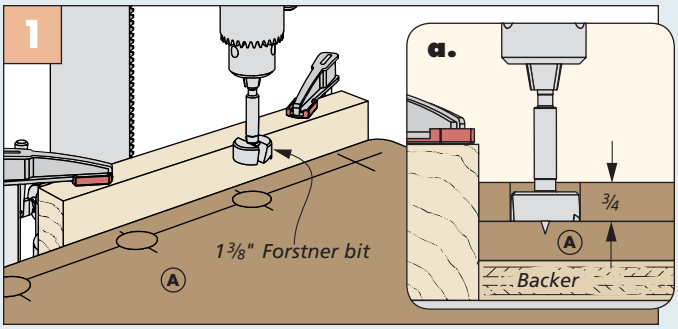


**Large Counterbores.** After gluing up the platens and trimming them to size, drill counterbores on the inside faces. The counterbores hold the springs that separate the platens.

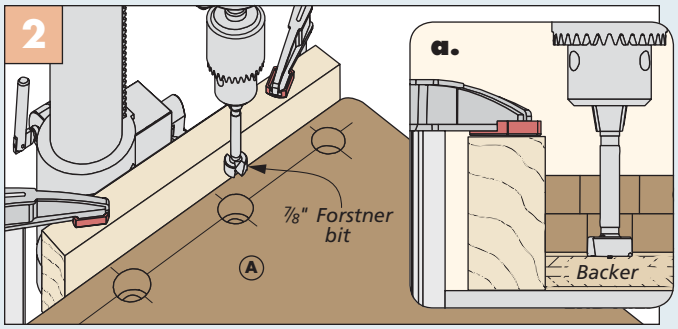


**Through Holes.** To provide clearance for the threaded rod used to provide clamping pressure between the platens, drill through holes at all the counterbore locations.

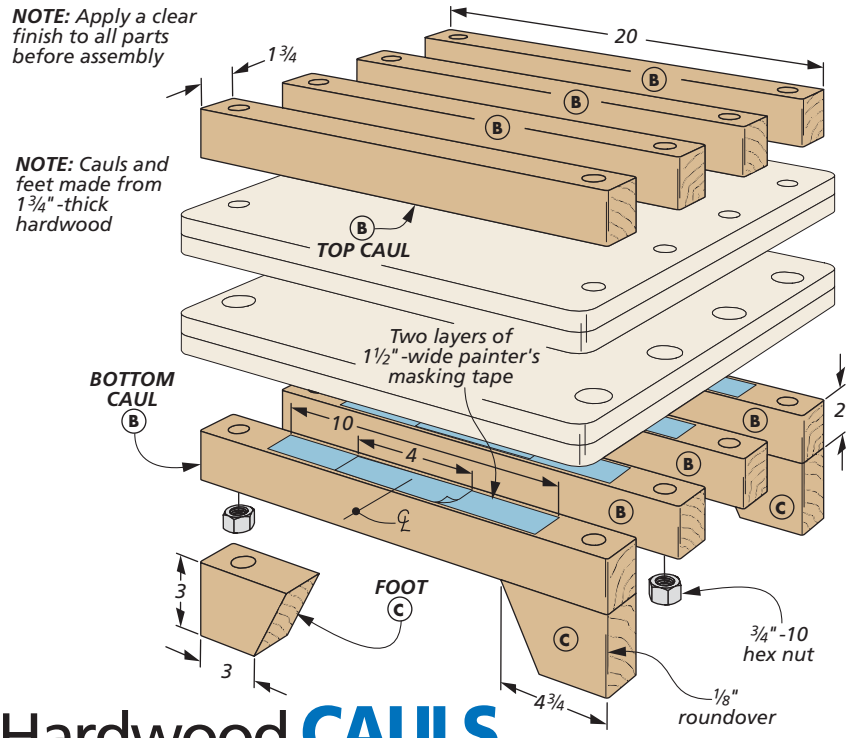


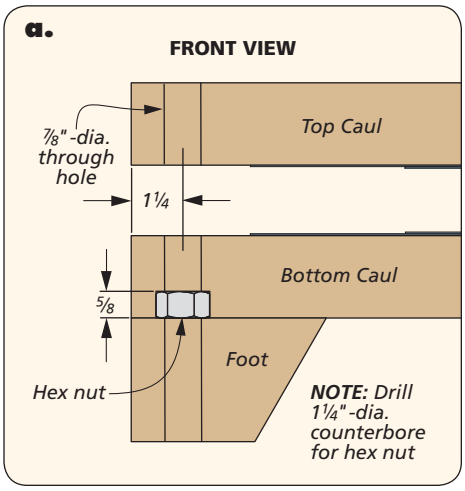


# Hardwood **CAULS**

There are just a few more things to do to complete the veneer press. The maple cauls you see above are up to the task of applying consistent clamping pressure. To elevate the press and provide clearance for the threaded rod, I added four hardwood feet. Finally, you'll add all of the hardware that ties everything together and turns all of the parts into a fully functional veneer press.

**TOP & BOTTOM CAULS.** The eight cauls are identical in size and shape. After they're cut to size, I rounded over the ends at the router table. From there, a trip to the drill press is in order.

The bottom cauls are counterbored to house hex nuts. The counterbores are sized so that the hex nuts have to be pressed into place to secure them.

After the counterbores are drilled, oversized through holes need to be drilled through all of the cauls. These holes allow the cauls to move freely along the threaded rod.

Installing the hex nuts into the counterbores on the bottom cauls comes next (photo below). For extra security, fill the voids around the nut with glue or epoxy.

**HARDWOOD FEET.** The details for making the feet are shown above. I started with an extra-long blank. It's easier to drill the through hole for the threaded rod before cutting the foot to final shape. Then simply cut the legs to shape and sand them smooth before gluing them to the bottom cauls. Just make sure the through holes align with those in the cauls to allow free movement of the rod.

**CREATING A CROWN.** Creating a crown on the cauls helps distribute clamping pressure to the center of the platens. But machining perfectly matched crowns would be a difficult proposition. You want them all to be consistent. So I simplified the crowning process by applying a couple strips of painter's masking tape, as shown above.

## HANDWHEEL ASSEMBLIES

To tie everything together and make a fully operational veneer press, you'll make a series of handwheel assemblies. Each assembly starts with a threaded

▲ With the power off, a drill press can be used to force the hex nut into the counterbore in the bottom caul.

## Materials, Supplies & Cutting Diagram

| | | |
|---|---|---|
| **A** | Platens (2) | 1½ MDF - 20 x 20 |
| **B** | Cauls (8) | 1¾ x 2 - 20 |
| **C** | Feet (4) | 1¾ x 3 - 4¾ |
| **D** | Handwheels (8) | 1 Ply. x 3½-dia. |

- (8) ¾"-10 x 12" Threaded Rod
- (8) ¾"-10 Hex Nuts
- (8) ¾"-10 x 2¼" Coupling Nuts
- (1) 3/16"-dia. x 18" Steel Rod
- (8) ¾" Flat Washers
- (8) 1.218" O.D. x 4" Comp. Springs
- (10 ft.) 1½"-wide Painter's Tape

*1¾"x 5" - 84" Hard Maple (5.8 Bd. Ft.)*

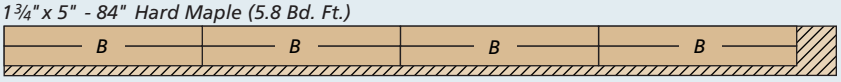


*1¾"x 4" - 24" Hard Maple (1.3 Bd. Ft.)*

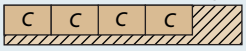


***ALSO NEEDED:***
*One 48" x 48" sheet of ¾" MDF*
*One 24" x 24" sheet of ½" Baltic birch plywood*

rod and a coupling nut. That's topped off with a plywood handwheel.

**ROD & NUT ASSEMBLY.** The first order of business is to cut the threaded rods to final length. I like to file off the sharp edges after cutting.

The coupling nut is pinned to the threaded rod (drawings at right). To do this, thread the coupling nut onto the rod and then drill two holes for steel pins to secure the nut to the rod. The lower right photo shows how a drill press vise securely holds the assembly for drilling.

You'll need to cut the 16 pins from 3/16" steel rod. I cut them about 1/8" longer than needed. After you peen them into the holes you drilled through the coupling nut and threaded rod, grind or file them flush with the coupling nut.

**PLYWOOD HANDWHEELS.** The handwheels are made from two layers of 1/2" Baltic birch plywood. The How-To box below shows how to create the final shape of the handwheels at the drill press.

Each handwheel is a press-fit over the coupling nut, as shown in Figure 3 below. A few solid taps on the bottom end of the threaded rod will seat the handwheel midway onto the length of the coupling nut.

**ASSEMBLY.** Before assembling the veneer press, it's a good idea to apply a clear finish to the platens and cauls and a coat of wax between uses. This helps prevent glue from sticking.

Putting everything together goes quickly. Arrange the bottom cauls to align with the holes in the bottom platen. Insert the springs then add the top platen and cauls. Thread the rod assemblies through until they engage the nuts in the bottom cauls.

**USING THE PRESS.** The handwheels make it easy to quickly tighten the cauls to bring the platens together. But for really torquing down, it's best to use a wrench on the coupling nut. W

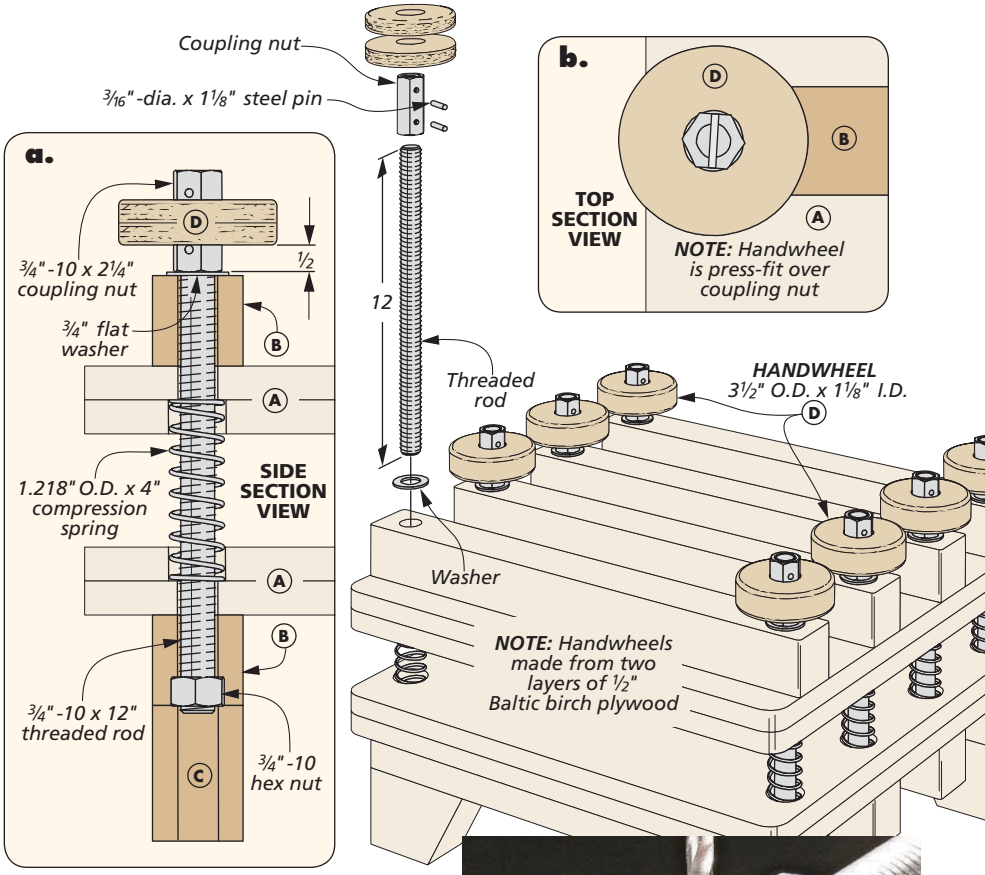


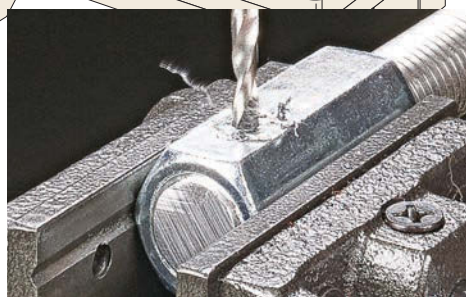

▲ A drill press vise holds the rod assembly secure while drilling the through holes for the pins.

## How-To: MAKING THE HANDWHEELS

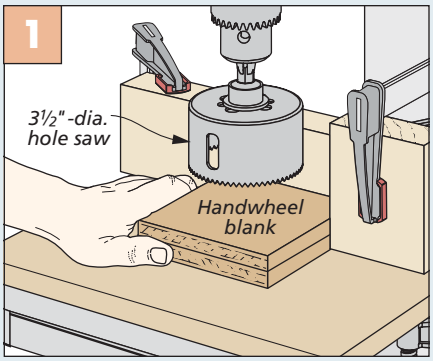


**Making Handwheels.** Use a hole saw or wing cutter to create the outside diameter of the handwheel.

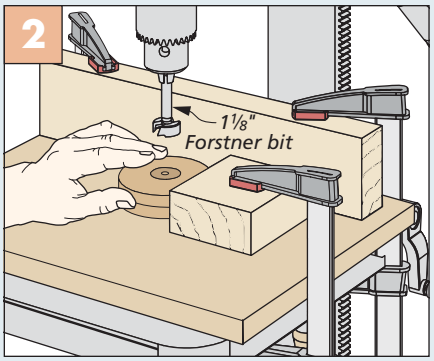


**Inside Diameter.** Switch out the drill bit to enlarge the center hole for a press fit over the coupling nuts.

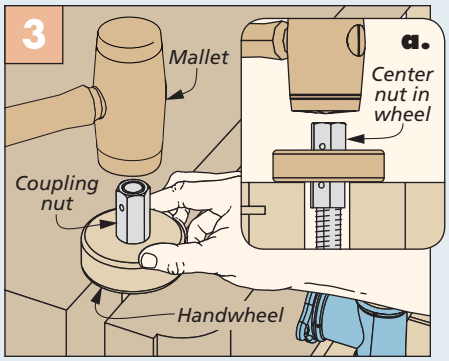


**Installing the Handwheel.** Fitting the coupling nut into the handwheel just requires a few taps with a mallet.

Designer Project

# Classic Chessboard

Here's a great addition to game night. This handsome board features a veneered playing surface that flips up for storage below.

Outside of spending time in the shop, there's nothing I like better than a game of chess with a friend or a couple rounds of checkers with the grandkids. This chessboard gives you the best of both worlds — a few interesting woodworking challenges, and a great excuse to play a few matches when you're finished with the project.

The unique feature of this chessboard is its go-anywhere design. The playing surface is actually a pair of lids that flip up to reveal a storage area for the game pieces. Magnetic catches hold the lids closed for travel. On the woodworking side, you hone your skills creating the veneered game board and the eye-catching box joints. Game on.

▲ Under the playing surface, there's plenty of storage for a full set of both checkers and chess pieces. Turn to page 67 for sources.

## Materials, Supplies & Cutting Diagram

| | | |
|---|---|---|
| **A** | Lid Panels (2) | ¼ ply. - 6 x 13 |
| **B** | Molding | ½ x 1 - 90 rgh. |
| **C** | Sides (4) | ⅜ x 2¾ - 15 |
| **D** | Bottom (1) | ¼ ply. - 14⅝ x 14⅝ |
| **E** | Ctr. Dividers (2) | ¼ x 2 rgh. -14¼ |
| **F** | Spacers (4) | ⅜ x 2 - 14¼ |
| **G** | Side Dividers (2) | ¼ x 1½ -14¼ |

- (2 prs.) Pivot Hinges
- (8) #6 x ⅜" Rh Woodscrews
- (4) Panel Magnet Cups
- (4) ⅜"-dia. Rare-Earth Magnets
- (4) ½"-dia. Magnet Washers
- (4) #6 x ⅜" Fh Woodscrews
- (4) #4 x ⅜" Rh Woodscrews
- (2) 12" x 24" Felt

*½" x 4" - 96" Red Oak (2.7 Sq. Ft.)*

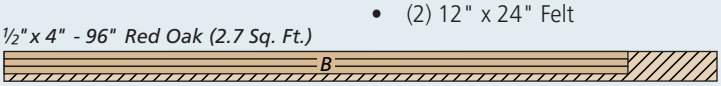


*½" x 5" - 60" Red Oak (Two Boards @ 2.1 Sq. Ft. Each)*

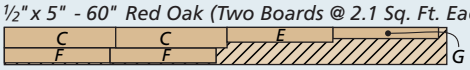


***ALSO NEEDED:*** *One 24" x 24" sheet of ¼" plywood*
*Two 8" x 16" sheets each of holly and bloodwood veneer*
*Two 8" x 16" sheets of backer veneer (any species)*

## A DIFFERENT APPROACH

When I make a box with lids, my usual approach is to make the box first, then fit the lid to the opening. For this chessboard, I'm doing things a little backward and making the lids first. But there's a good reason for doing it this way.

The lids serve as the playing surface, and each of the squares needs be the same size. That means you can't trim the lid down the road. By making the lids first, you can size the box around it.

**SOME VENEER WORK.** The squares are made from alternating pieces of veneer. (I used holly and bloodwood.) The squares are glued to a framed plywood panel to create each lid. Cutting and assembling 64 small squares may sound intimidating, but it really isn't. Instead of working with small squares, you'll make long strips of veneer. The upper right drawings give you the overall idea of how it works.

The process begins with cutting four strips of each color to the final width of the squares (1¾"). This is shown in Figure 1. A utility knife with a fresh blade and a straightedge are the only tools you need. To avoid tearing the grain, cut through the veneer in a few light passes.

Gather up four strips, two of each color, and arrange them in an alternating pattern to form each lid sheet. Choose one of the faces of each set of strips as the bottom (glue) face. From this face, the strips are temporarily held together with painter's masking tape (Figure 2).

On the top face, you use special-purpose veneer tape to draw the strips together in preparation for gluing. This tape is water activated. As the tape dries, it shrinks slightly, pulling the pieces tightly together for a seamless fit. Figure 3 shows how to do it. Short pieces of tape run across the joint. Then apply long strips of veneer tape along each seam.

**CREATE SQUARES.** From here, you crosscut the assembled sheets into shorter strips that are the same width as the long strips. If you flip every other strip end for end, you'll have created the checkerboard pattern you're looking for.

Like before, it's time to tape the short strips together with masking tape on the bottom and veneer tape on the top. It looks messy, but the results are worth it.

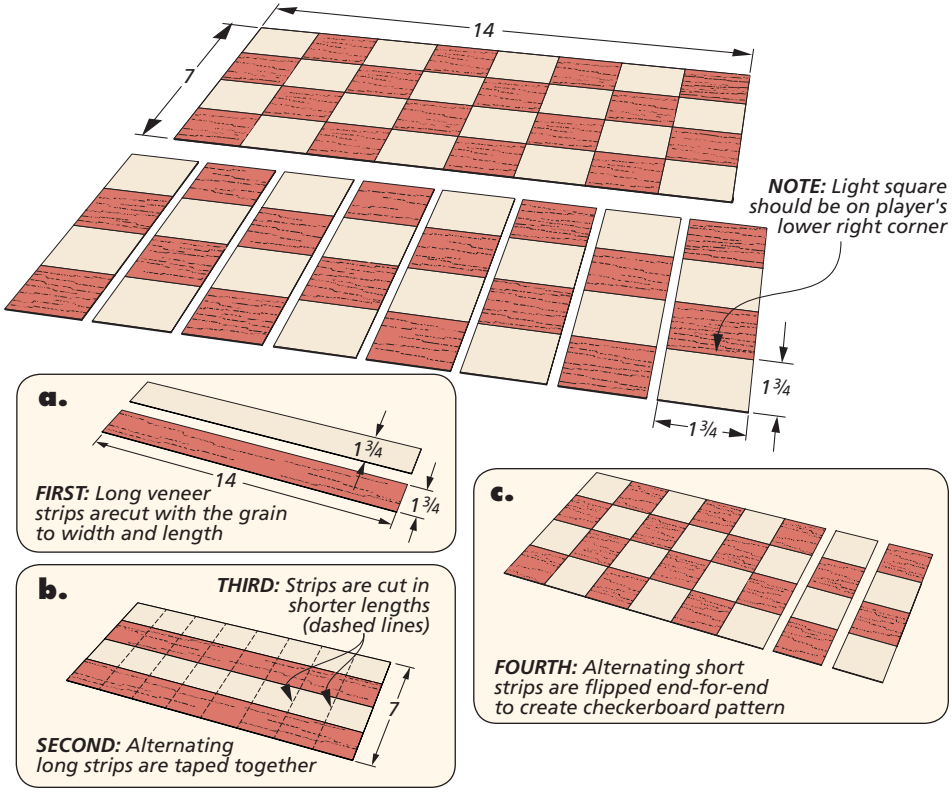


## How-To: CREATE VENEER PATTERN

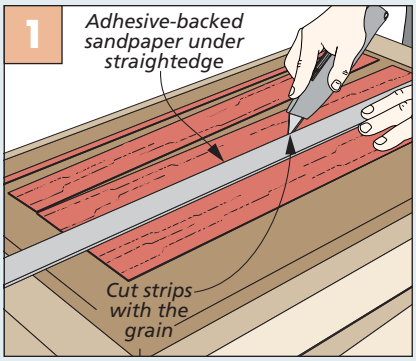


**Long Strips.** After trimming a straight edge on the veneer sheet, cut four strips of veneer in each color.

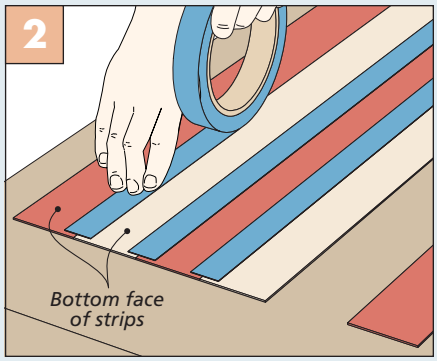


**Masking Tape.** On the bottom face, use masking tape to hold the strips in position for each lid sheet.

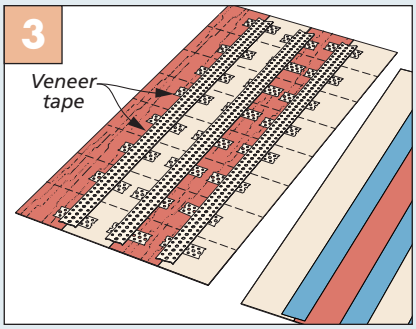


**Veneer Tape.** Short pieces of veneer tape across the joints pull the strips together. Long pieces seal the deal.

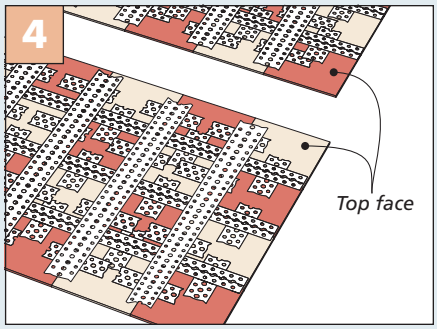


**Cut & Tape.** Crosscut the strips and flip every other strip. Repeat the taping process to complete the lid sheets.

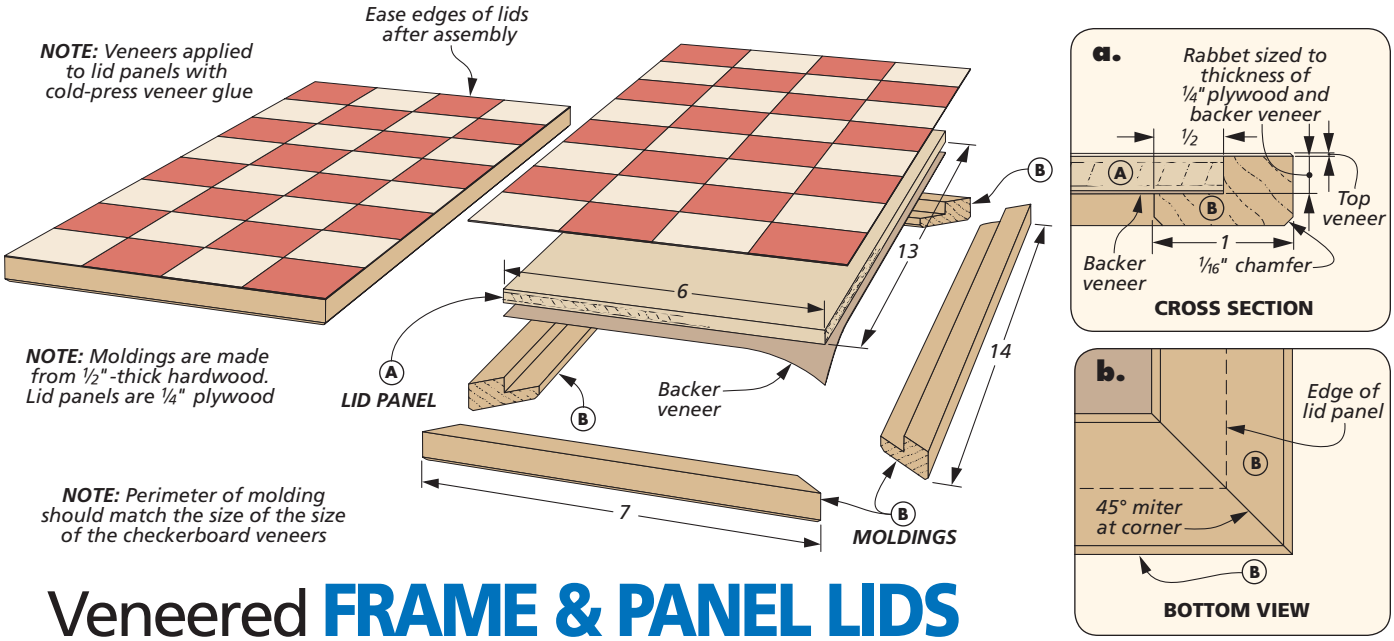


# Veneered **FRAME & PANEL LIDS**

The veneer sheets are only the starting point for creating the lids. The next steps involve building a rigid frame to support the veneer., The result is a flat, stable playing surface and cover for the box.

The drawing above shows the other elements of the lids. The checkerboard overlays a plywood panel resting in a rabbeted frame of hardwood molding. The molding does two things. It increases stiffness around the edge of the lid, and it conceals the edges of the plywood.

**PANEL FIRST.** A close look at the drawing shows this isn't an ordinary plywood panel. The bottom face has an additional layer of veneer added to it. Why? The reason has to do with wood movement.

If you add veneer to one face of a piece of plywood, the balance is thrown off, and the panel could warp with changes in humidity. The solution is to glue a layer of veneer to the opposite face to keep the panel balanced.

For now, cut a pair of oversized lid blanks and apply backer veneer to one face. (The panel is cut to size a little later on.) I used glue that's designed for veneer work. It's fairly thick and has a high solids content, so it won't bleed through thin veneer. You can find where to purchase it in Sources on page 67.

**VENEER PRESS.** The key to getting a good bond and flat surface lies in applying consistent clamping pressure. One way to do that is to sandwich the lid panel between pieces of MDF and use clamps. Another great option is to use the veneer press shown on page 26.

**MOLDING DETAILS.** I mentioned earlier that the molding has a rabbet sized to accept the panel, as shown in detail 'a' above. With the backer veneer glued to the lid panel blank, use the blank as a gauge for sizing a rabbet in the molding (Figure 1 below). Here you can also see that I'm working with an extra-wide blank. This larger piece is safer and easier to handle.

Swap out the dado blade for a combination blade and cut the molding pieces to final width from the blank, as in Figure 2. Head over to the router table

## How-To: MAKE THE LID FRAMES

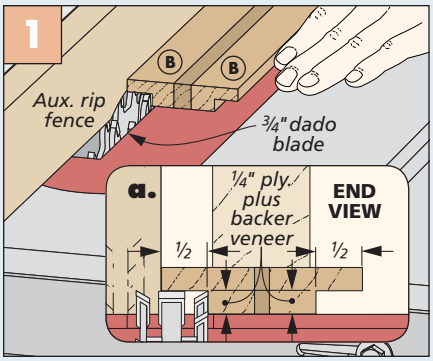


**Cutting Rabbets.** On an extra-wide blank, cut a rabbet along each edge to hold the lid panel.

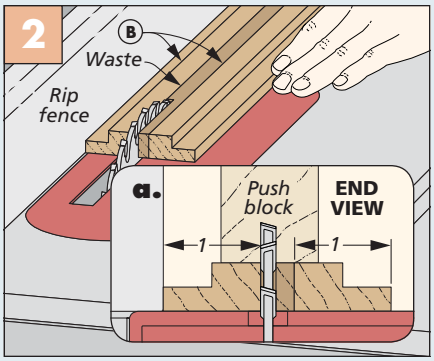


**Frame Strips.** Install a combination blade, flip the wide blank face down, and cut strips to final width.

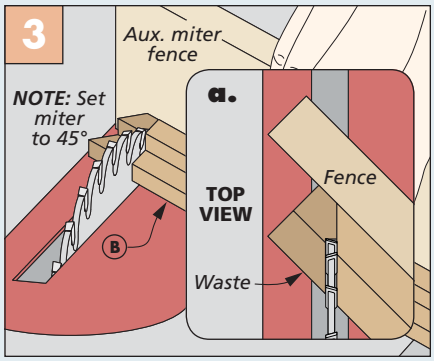


**Miter the Ends.** Miter the strips to create frames that match the size of the checkerboard perimeter.

to ease the lower edges of the molding strips with a small chamfer, as shown in detail 'a' on the previous page.

Then it's back to the table saw, where you'll grab your miter gauge, set it to 45°, and miter the strips to create the frame, as shown in Figure 3 on the previous page. The key here is that the perimeter of the frame matches the length and width of the checkerboard veneer.

**ASSEMBLY TIME.** All that's left is to trim the lid panels to fit the rabbeted molding and glue the panels in place. Take care to keep the assembly flat and square.

## FINISHING THE LIDS

What you have now is a pair of lid frames on one end of the bench and a pair of taped-up veneer sheets on the other. It's time to bring them together. You can follow along in the box at right as I step through the process. Since the veneer and lid are at their final size, you want to make sure nothing slips around as you glue the assemblies together.

**GLUEUP.** Before gluing the veneer in place, make sure all the masking tape has been removed from the bottom face. Then brush glue onto the lid frame assembly, as shown in Figure 1. Masking tape still plays a role in the assembly, however, as you can see in Figure 2.

Since the bottom of the lid is recessed, I made a form for addtional support to apply the veneer, as shown in Figures 3 and 4. You could also slip this form into the veneer press I talked about earlier.

**CLEANUP.** It's best to let the glue cure overnight before removing the clamps. When you pull the lid out, you're faced with the cleanup work. I started by scraping and sanding away glue squeezeout on the ends and edges of each lid, as in Figure 5. Your next obstacle is removing the veneer tape. As daunting as it seems, the water-activated adhesive comes off by moistening the surface (Figure 6). A sharp card scraper handles any gummy residue, as shown in Figure 7.

The joints between the squares may feel a little uneven, but a quick pass with a random orbit sander and 150-grit paper does the trick. Connecting the sander to a shop vacuum keeps sanding dust from discoloring the light squares.

## How-To: GLUE VENEER TO THE PANELS

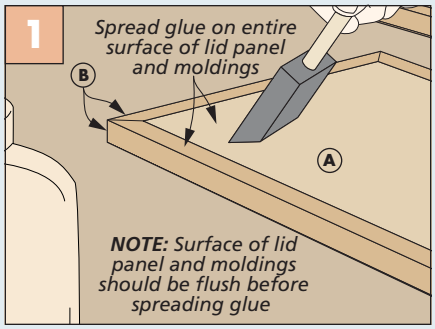


**Apply Glue.** A foam brush helps to apply an even layer of glue across the top of the lid assembly.

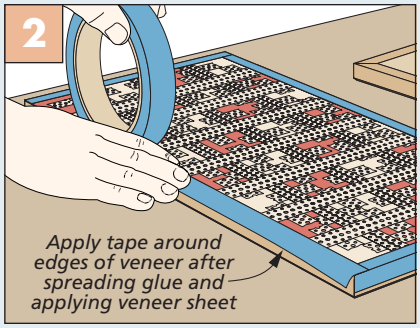


**Prevent Shifting.** Set the veneer sheet in place and use strips of masking tape to keep it from sliding around.

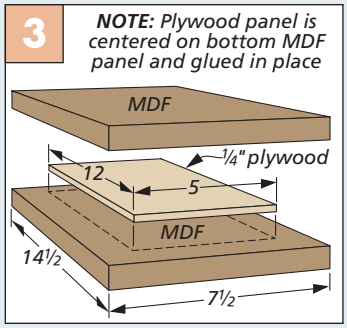


**Gluing Form.** A plywood panel fits in the recess under the lid to apply even pressure.

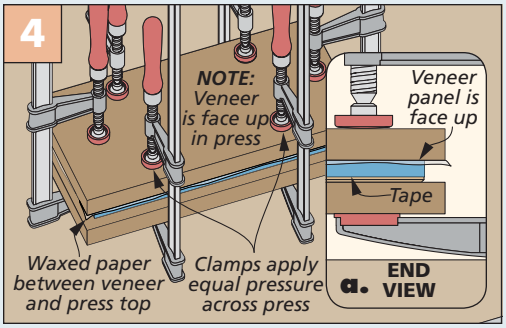


**Add the Clamps.** Sandwich the lid between the MDF panels and add clamps around the edge to ensure a solid, even glue bond.

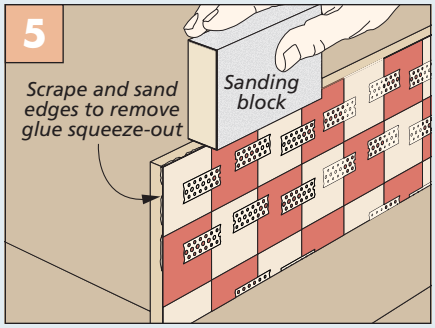


**Clean Up.** Peel away the masking tape and remove any glue squeeze-out to clean up the edges of the lid.

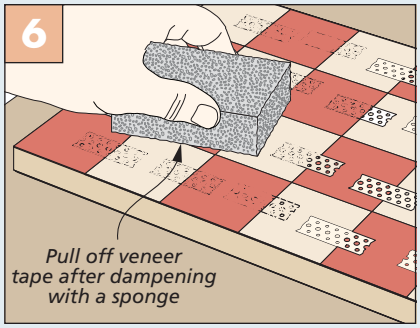


**Remove Veneer Tape.** A damp sponge softens the veneer tape. Peel away as much as possible.

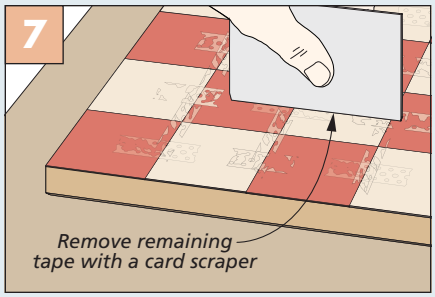


**Clear the Residue.** A card scraper does a good job of removing any remaining tape and adhesive.

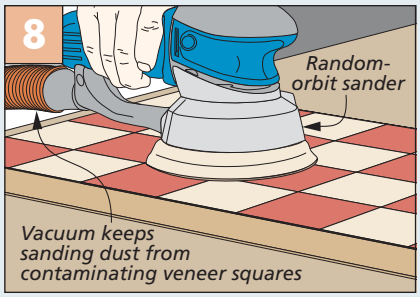


**Final Sanding.** A power sander and fine-grit paper levels the veneer joints and leaves a glass-smooth surface.

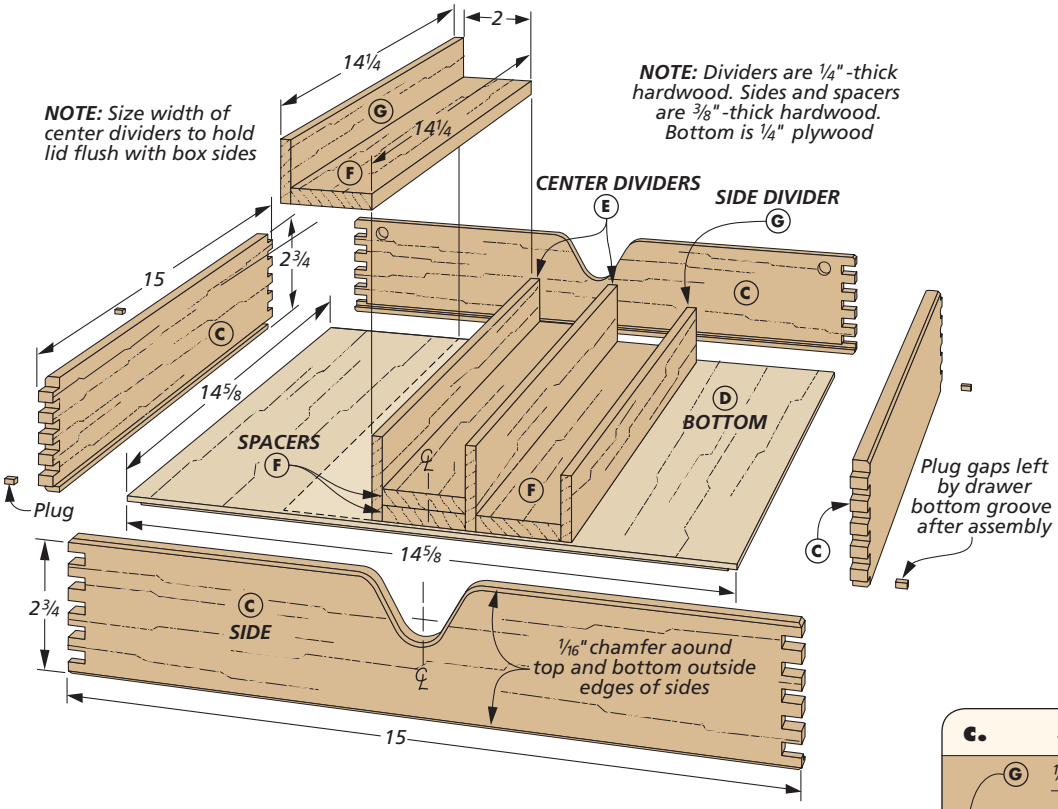


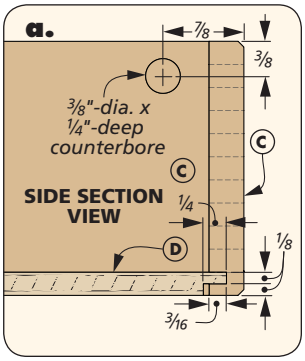


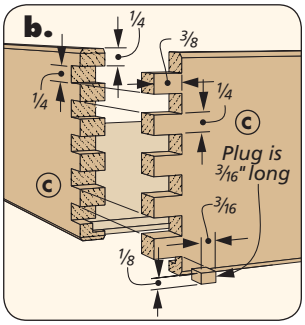


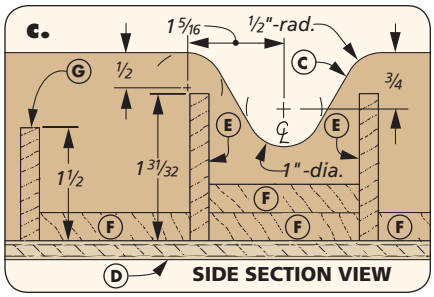


# A box for the CHESSBOARD

Completing the lids means the most intensive work is behind you. Your cruise to the finish line involves making a simple box along with a few details.

The box is assembled with box joints. Inside there are several dividers that create the storage trays for the game pieces, as you can see in the drawing above.

**SIZE THE BOX.** Upfront, I mentioned that the lids drive the size of the box. While I included the dimensions for my box, you'll need to base yours off the final size of the lids you made. What you're aiming for is a box sized for a ⅛" gap around the outside edges of the lids. The lids should meet in the center.

**BOX JOINTS.** I chose box joints mostly for strength. However, the alternating pattern of fingers and slots echoes the pattern of the game board, as well.

Cutting box joints isn't complicated, just a little repetitive. The dimensions for the joints are shown above in detail 'b.' All it requires is a simple table saw jig and attention to a few key details. On page 18, you can find the procedure I

## How-To: MAKE THE FINGER PULL & RABBET THE BOTTOM

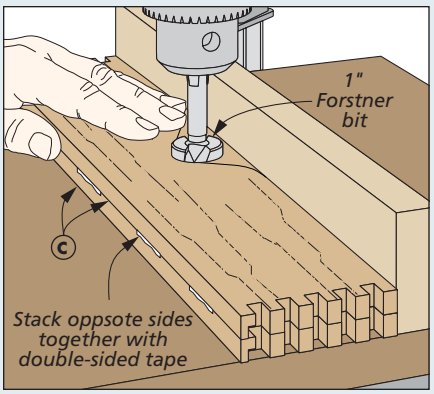


**Drill a Hole.** A Forstner bit forms a smooth radius for the bottom of the finger pull recess in the sides.

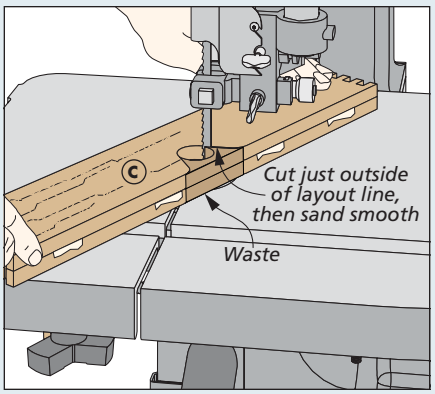


**Saw & Sand.** Cut away most of the waste at the band saw. Smooth the edges to blend into the radius.

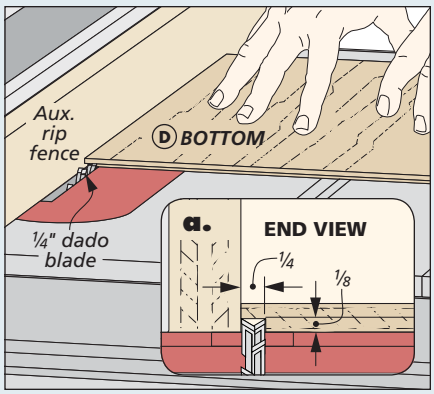


**Create a Tongue.** Cut a rabbet around the bottom panel so the resulting tongue just fits into the groove.

followed to get snug-fitting joints with a minimum of fuss.

**OTHER ITEMS.** Before you can glue up the box, there's a little more work to be done. You need to cut a groove for the box bottom, as in detail 'a' on the previous page. Then drill holes for the hinges on the inside faces of opposite sides.

Another detail to add is the finger pull recess cut into these same sides. The lower left and middle drawings on the previous page highlight how this is done.

After cutting the bottom to size, cut a rabbet around the edges to form a tongue that fits into the groove. At this point, you can glue up the box and plug the holes left by the groove (detail 'b' on the previous page).

**DIVIDERS.** Inside the box, dividers organize the space to hold the checkers and chess pieces. Spacers raise the pieces so they're easy to reach, as in detail 'c.' You can glue the dividers to the spacers, then center and glue the whole assembly to the bottom of the box.

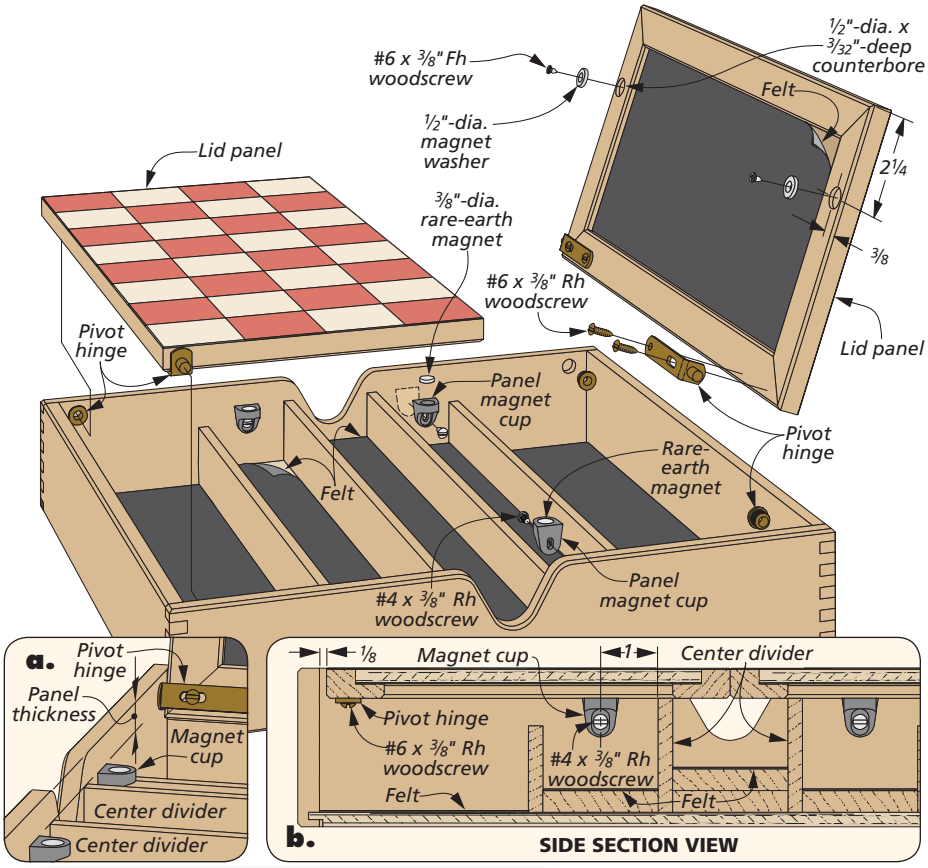


## INSTALLING THE LIDS

The lids can be added to the box at this point. Pivot hinges provide a low-profile look, as shown in the drawing at right. A pin on each hinge fits into a cup installed in the case sides. This design means you can't attach the hinges to the lids and then install them in the box. Instead, you need to install the hinges, then add the lids.

**ADD CATCHES.** Before doing that, it's a good idea to add the magnetic catches, as in details 'a' and 'b.' These provide much-needed support for attaching the lids. They're installed so the lid is flush with the top of the box.

You need to install a pair of magnet washers in each lid to engage the catches. The details on how to do this are shown in Figure 1 at right.

**MOUNT THE LIDS.** With the catches in place, you're ready to attach the lids. Figures 2, 3, and 4 show the steps. I used double-sided tape to temporarily hold the lid in place in order to mark the location of the screw holes.

The finishing touch is to line the inside with adhesive-backed felt. It adds a nice look and cushions the pieces inside. Now all you need to do is to find a worthy adversary and set up for a match. W

## How-To: INSTALL THE LIDS

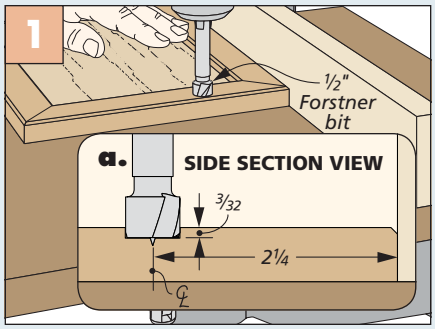


**Washer Recess.** A Forstner bit creates a flat-bottom hole to install a magnet washer to help hold the lids closed.

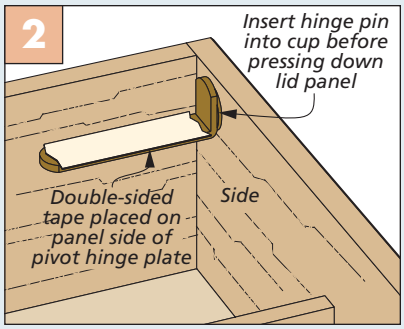


**Tape the Hinge.** Apply a piece of double-sided tape to the hinge plate to hold it to the lid.

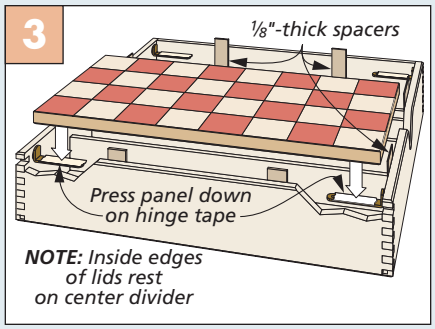


**Spacers as Guides.** Tape spacers to the box to create an even gap around the lids as you set the lids in place.

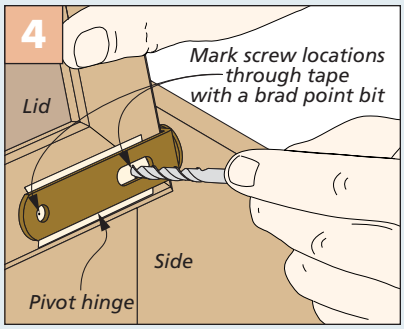


**Lift & Mark.** Gently open the lid and mark the screw locations in the bottom face of the lid.

Shop Project

# Rolling Storage Lockers

Pack a lot of storage into a small space with these cabinets on wheels. They roll side-to-side for easy access to items stored in the back.

You may be familiar with the compact filing system used at some larger businesses like medical offices. A series of filing cabinets rolls on metal tracks. This system takes up less floor space yet contains a vast amount of storage.

The large cabinets you see here allow you to duplicate this storage efficiency in your garage or shop. From the front, they look like your average cabinets. The doors on the front enclose an easily accessible storage area fitted with adjustable shelves or pegboard.

But what you might not notice are the storage areas at the rear of the cabinet on either side. These deep cubbies can be accessed by sliding the cabinets side-to-side on the large rollers. All you need is about two to three feet of space between the cabinets to be able to reach in and grab an item stored along the side.

**EASY CONSTRUCTION.** You'll need a few sheets of plywood to build each cabinet. Because you're working with large pieces, you might want to call in a few favors and ask for some help when it comes time to manhandle the sheets of plywood to cut parts to size. And you'll probably need some help during the assembly process, too.

Though the cabinets are large, dado joints, glue, and screws make the assembly process foolproof. The main cabinet parts interlock for a solid assembly.

The shop-made roller assemblies can handle over 2,000 lbs., so you won't have to worry about overloading the cabinets. And that means you'll have no concerns when it comes to storage space.

# Construction Overview / OVERALL DIMENSIONS: 37"W x 86"H x 36"D (one locker)

Slab doors are easy to make and install

Adjustable shelves create flexible storage options

Hand-holds provide a solid gripping surface for moving the cabinets

Surface-mounted hinges are easy to install and adjust

Edging adds strength to the shelves

Dado and rabbet joinery make for a rock-solid cabinet assembly

Glue and screws lock cabinet components into dadoes

Top and bottom cubbies are divided

Lipped shelves prevent stored items from falling when cabinets are moved

**NOTE:** Refer to page 43 for pegboard storage add-ons

**NOTE:** For hardware sources, turn to page 67

¾" bolts serve as axles

Heavy-duty wheels support fully-loaded cabinets

Rabbets on top, bottom, and back edge of sides help square up cabinet during assembly

▲ The beefy handle at the front of the cabinet provides a good hand-hold for rolling the cabinet.

▲ Sturdy, shop-made wheel assemblies make it easy to move the cabinets side to side.

▲ Increase your storage options by adding pegboard racks to the doors and cabinet back.

# Start with the **MAIN CASE**

As I mentioned, the cabinet construction involves cutting a lot of dadoes. The cabinet parts interlock in these dadoes to provide a strong and stable assembly.

Cutting all of the parts to size at the table saw is going to require some side and outfeed support for the larger pieces. A great alternative would be to set up a couple of sawhorses and use a track saw or straightedge with a circular saw. Make sure to use a plywood blade to minimize chipping.

**DADOES & RABBETS.** I used a hand-held router to cut all of the dadoes, grooves, and rabbets. The box below and Shop Notes on page 64 show the dado jig I used with a dado cleanout bit. For routing the rabbets on the edges of the workpieces, this same jig also serves as a guide for the router with a straight bit.

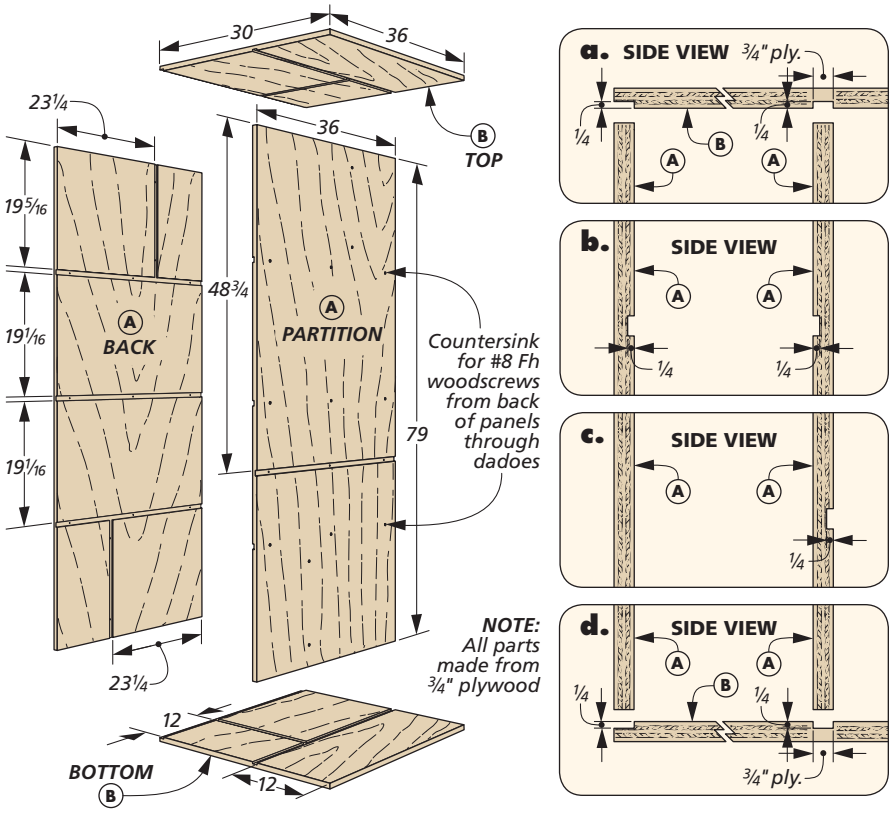


**CASE BACK & PARTITION.** The back and partition form the rear storage area at the back of the cabinet that's accessed from the sides. The inside faces of the two parts are mirror images. They include dadoes for fixed shelving and a pair of stopped grooves for vertical dividers. The partition also has a dado cut on the front face that holds a fixed shelf, as shown in detail 'c.'

**TOP & BOTTOM.** The top and bottom parts shown above include a groove to hold the cabinet partition. A rabbet along the back edge holds the case back. The stopped dado holds a divider that's added later to split up the space at the back of the cabinet. To cut the stopped dado, rotate the dado jig, align it with layout lines and attach it with double-sided tape. Then it's an easy task to rout the dado just like the stopped grooves.

## CASE SIDES & SHELF

A pair of sides frame the front storage area. After cutting them to size, cut the rabbets along the top, bottom, and rear edges. These wrap around the top, bottom, and partition to hold the case square during assembly. Dadoes on the inside faces hold the fixed shelf. Cut the shelf to size so you can prepare to assemble the case (main drawing, next page).

**PREP FOR ASSEMBLY.** Assembling a case of this size can be challenging. It's too large to effectively apply clamps. So I rely on screws through the dadoes to help pull the parts together.

To make it easier to locate the screw holes, I first drill a shank clearance hole

## How-To: CUT DADOES & RABBETS

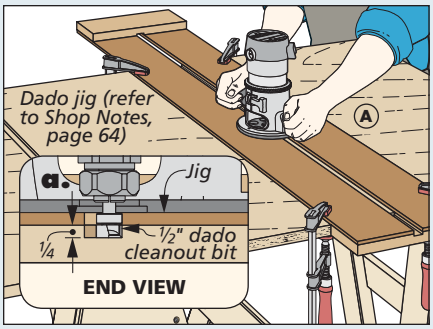


**Through Dadoes.** Use a dado cleanout bit with a dado jig to rout dadoes and grooves in the panels.

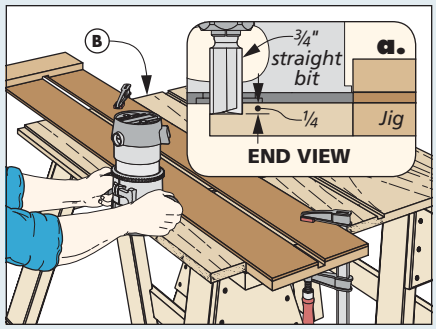


**Routing Rabbets.** The outside edge of the dado jig serves as a guide to rout rabbets using a ¾"-dia. straight bit.

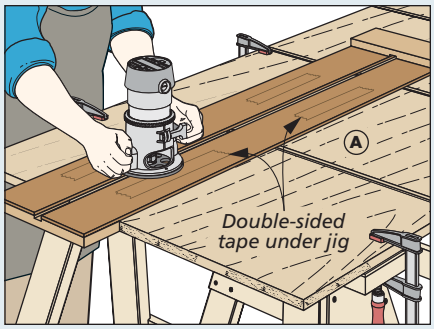


**Stopped Grooves.** Attach the dado jig to the panel with double-sided tape to rout the vertical, stopped grooves.

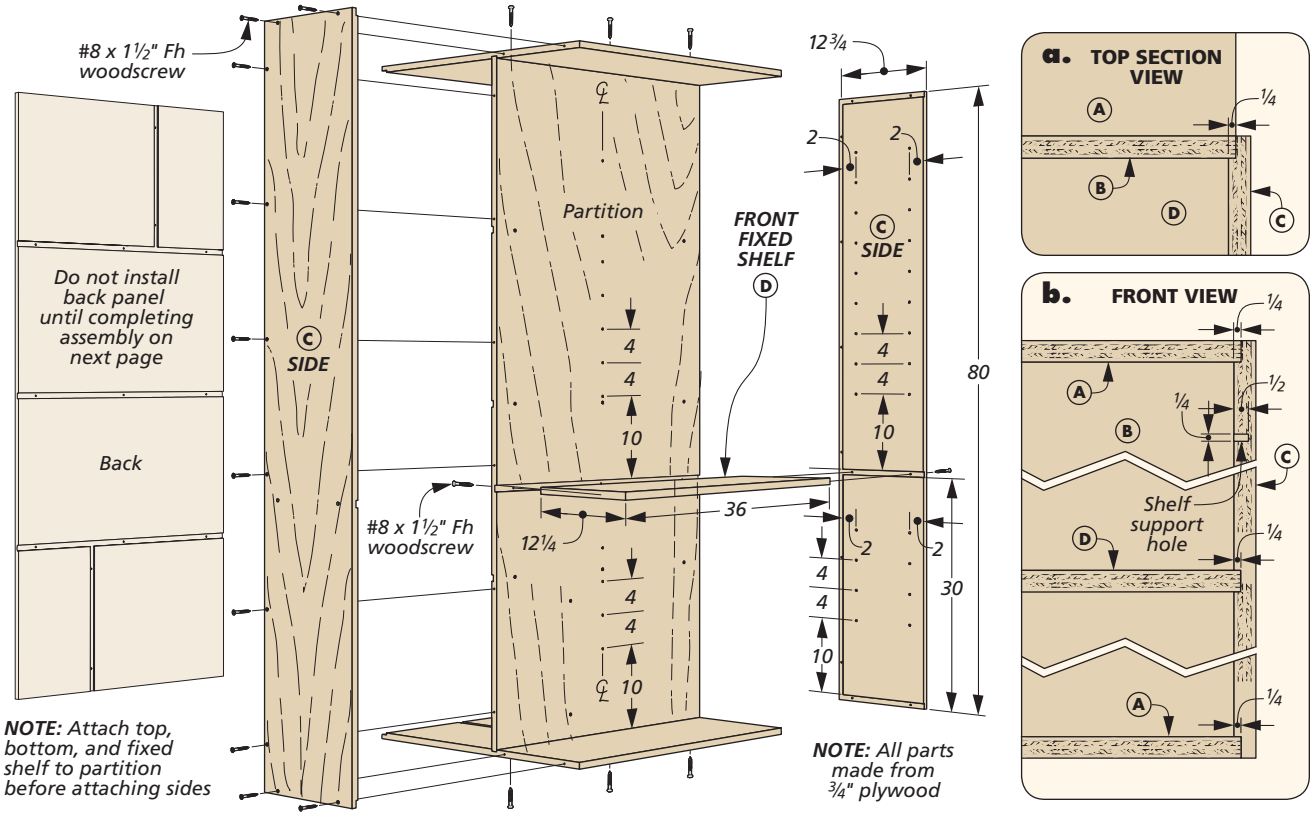


from inside the dado through to the back side. Follow that up with a countersink bit on the back side at each hole location.

There's one other step to take before you start fitting parts together. And that's to lightly ease the sharp edges of each workpiece where they fit into a dado. This serves two purposes: It helps guide the piece into the dado. Plus, it prevents the thin veneer from splitting off as you draw the parts together.

**TEST FIT.** Before adding glue, it's a good idea to test the fit of all the parts. A few light taps of a dead-blow mallet should be all you need to seat the parts in the dadoes and grooves. If they're too tight, sand a little off each face at the edge of the workpiece until it slides into the dado in the mating piece.

**ASSEMBLY.** Figure 1 below shows one way to assemble the components you've made so far. You may want to enlist some help for this step. I started by gluing the partition into the dadoes in the top and bottom. A slower-setting glue can be your friend here (I used *Titebond Ultimate*.) Drive screws to help hold the assembly together as you add the fixed shelf. You'll need to flip the assembly on its side to drive screws through the partition into the shelf.

Adding the sides will help square up the assembly. Apply glue to the rabbets and dado and attach the sides to the top, bottom, and partition, making sure the fixed shelf seats completely into the dadoes. You'll also need to ensure the rabbets are tight against their mating pieces before driving in the screws. Here, a few 4' clamps can help hold the parts in position until the screws are seated.

**SHELF PIN HOLES.** One of the storage options is adjustable shelving. So you've got a few holes to drill for shelf supports in the sides and, for extra support for the shelves, the partition.

The best way I've found to drill shelf pins after a cabinet is assembled is to use a jig or template. You can see what I mean in Figure 2. After laying out and drilling the holes in the template using the drill press, clamp the template to the cabinet side. Adding a stop collar on the bit in your portable drill helps ensure every hole is a consistent depth. You can use the same template (held with double-sided tape) to drill the partition.

## How-To: ASSEMBLE THE FRONT CASE

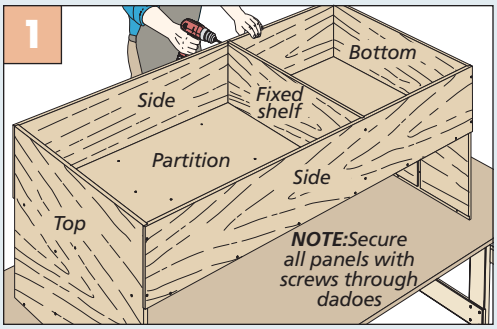


**Assembly.** After applying glue, install the partition to the top and bottom before adding the fixed shelf and sides.

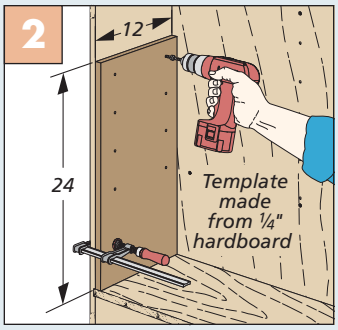


**Shelf Pin Holes.** Use a template as a guide for drilling the holes for shelf pins.

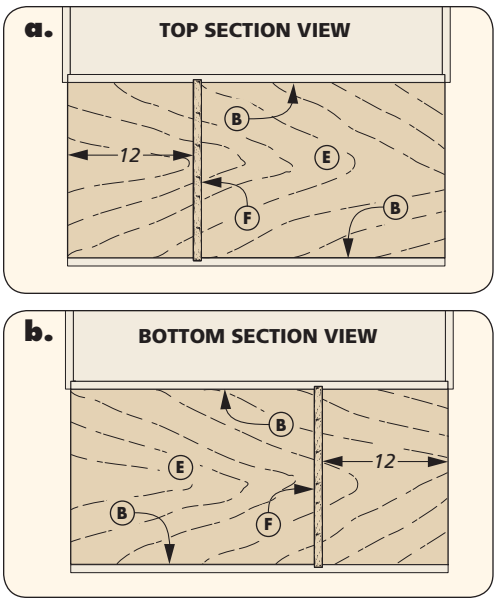


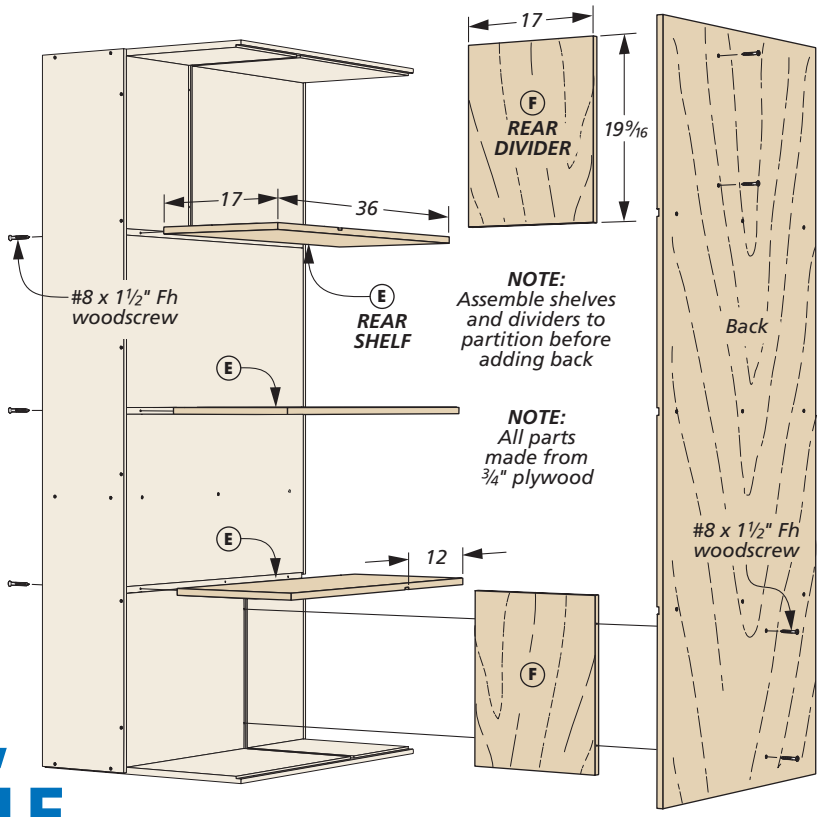


# Add the DIVIDERS, SHELVES & HANDLE

Now that all of the joinery has been cut on the main case components, making the other parts that form the case goes pretty quickly. The dividers and shelves split up the storage space for more shelf real estate. The large handle provides a handy way to move the cabinet side-to-side to access the rear shelves.

**FIXED SHELVES & DIVIDERS.** The back of the cabinet features three fixed rear shelves that fit into the dadoes in the partition and back, as illustrated in the drawing above. The top and bottom rear shelves have dadoes that align with the vertical grooves in the partition and back, as well as the dadoes in the case top and bottom. All of these dadoes align to capture the dividers.

To help locate the dadoes, dry-fit each shelf into the dado in the partition and mark where the dado needs to be cut in the shelf. These marks serve as guides for positioning the inside edges of the dado jig to rout the dado.

You're ready to add the rear shelves and dividers to the cabinet assembly. I like to run a bead of glue down the center of the dadoes. Take time to make sure each part is seated in the dado before adding the screws. This should require

## How-To: ASSEMBLE THE REAR DIVIDERS, SHELVES & BACK

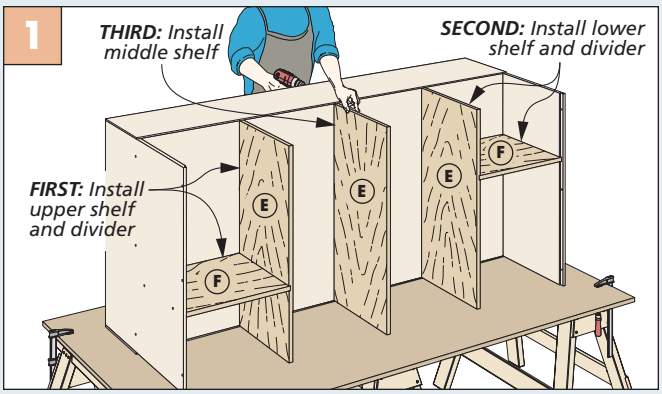


**Internal Parts.** It's always a good idea to dry-assemble the parts first to make sure everything goes together tightly. Then you can add glue and screws to secure the parts.

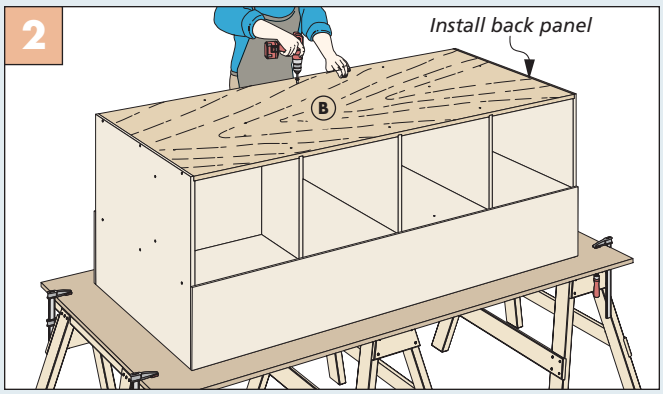


**Installing the Back.** As you lay the back in position, be sure all of the shelves and dividers engage the dadoes and grooves in the back. Then you can drive screws to secure it.

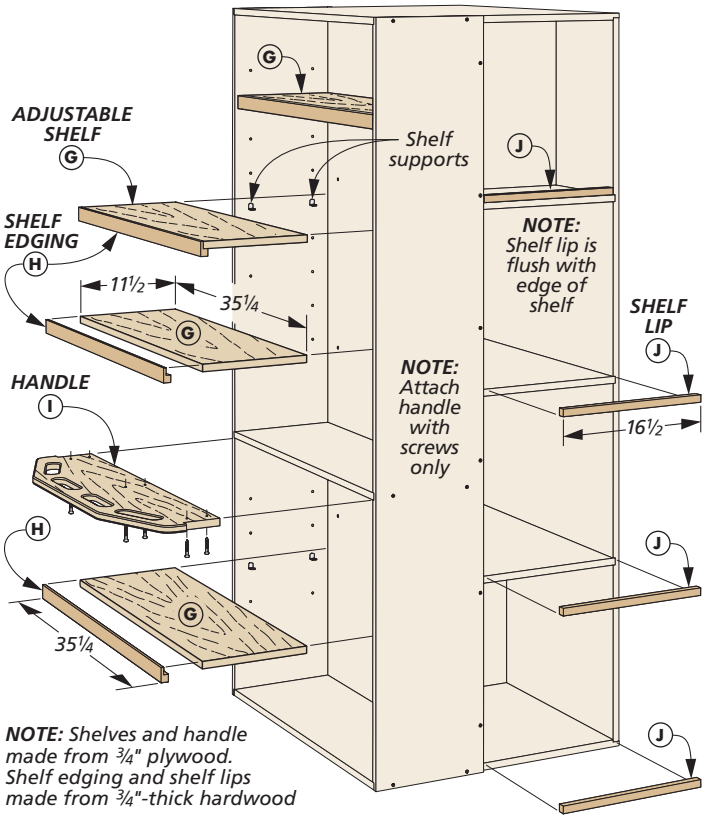


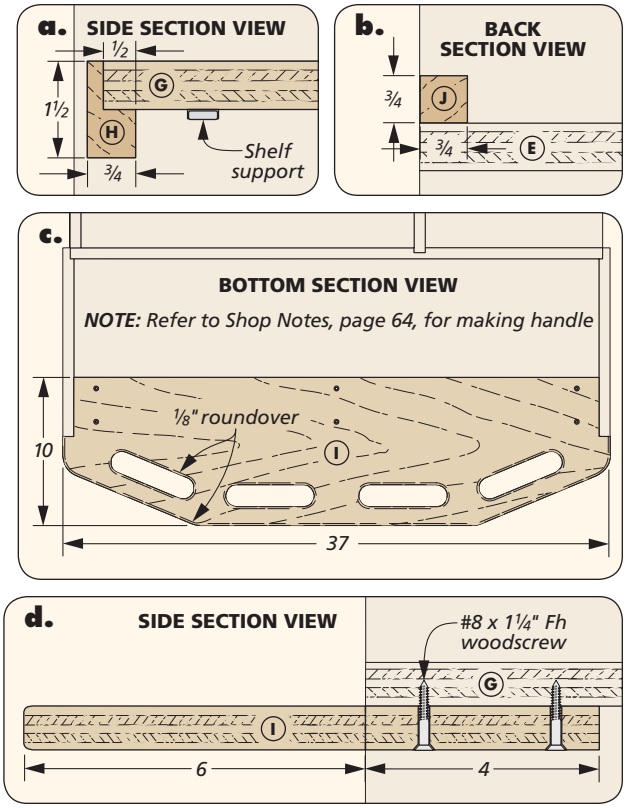


nothing more than a few light mallet taps. Finish up the case by adding the back. You may need to call in some help again for this step.

## ADJUSTABLE SHELVES

Next up is a set of adjustable shelves. Like the fixed shelves, simply cut them to size. To add strength and rigidity for storing heavier items, I added a strip of hardwood edging (detail 'a' above). To make the edging, rip blanks to width then use a dado blade to create a rabbet, as in Figure 1 below. After gluing the edging to the shelves, you can set the shelves aside for now. You'll install them after you add the roller assemblies and set the cabinet upright.

**HANDLE.** The handle you see above is cut to fit the overall width of the cabinet and will be attached to the bottom of the front fixed shelf. For this to work, form a notch at each end of the handle to wrap around the case sides. Since the notch is so long, I found that the band saw is the best tool for cutting them out.

Detail 'c' and Shop Notes on page 64 provide the dimensions and instructions for cutting and shaping the handle. It involves making a template to lay out the location of the hand-holds and outside shape of the handle. Round over all the front edges and hand-holds then sand everything smooth. Detail 'd' above shows how the handle is mounted to the fixed shelf with screws. This makes it easier to remove the handle, if needed, to move the locker through a doorway or narrow space.

**REAR SHELF LIPS.** When you move the cabinets side-to-side to access items in the rear portion of the cabinet, there's a chance that items on the rear shelves could fall out of the cabinet. To help prevent this, I added some small strips of hardwood at the ends of each of the rear shelves. These ¾" x ¾" strips are just glued in place. The main drawing and detail 'b' above shows where these lips are installed on the shelves.

## How-To: CUT SHELF EDGING & HAND-HOLDS

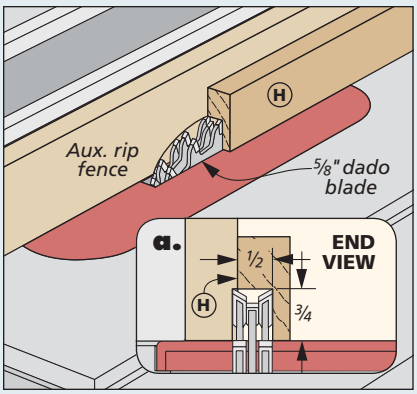


**Edging.** The wide edging adds strength to the shelves. Cut a rabbet to wrap around the front edge.

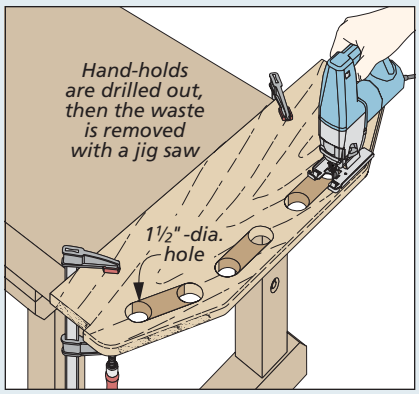


**Handle.** Turn to page 64 to find out how to make the handle using a template, jig saw, and router.

# Adding final **DETAILS**

There are a couple of details to add to the cabinet before you can put it to use. First come the wheel assemblies that allow the lockers to move side to side. Then you'll be able to add the doors before deciding on your storage options for the upper cabinet: Adjustable shelving or handy pegboard panels.

**WHEEL FRAMES.** If you build more than one locker, you'll likely have them placed side by side to conserve floor space. To access the contents at the rear of the locker, you simply roll it to the side. Even if you just build one locker, the ability to have it tucked into a corner but still be able to access the storage at the rear is a big plus.

To provide mobility for the locker, I added two upside-down U-shaped frames that each hold a pair of wheels. The wheels are 5" in diameter to roll over uneven floors more easily. Plus, each one is rated for up to 700 pounds — enough for plenty of heavy-duty storage.

The drawings above and in the box below provide an overview of how the wheel assemblies go together. The wheel frame top is cut to width about ⅛" wider than the thickness of the wheels. This allows the wheels to rotate freely without binding on the frame sides.

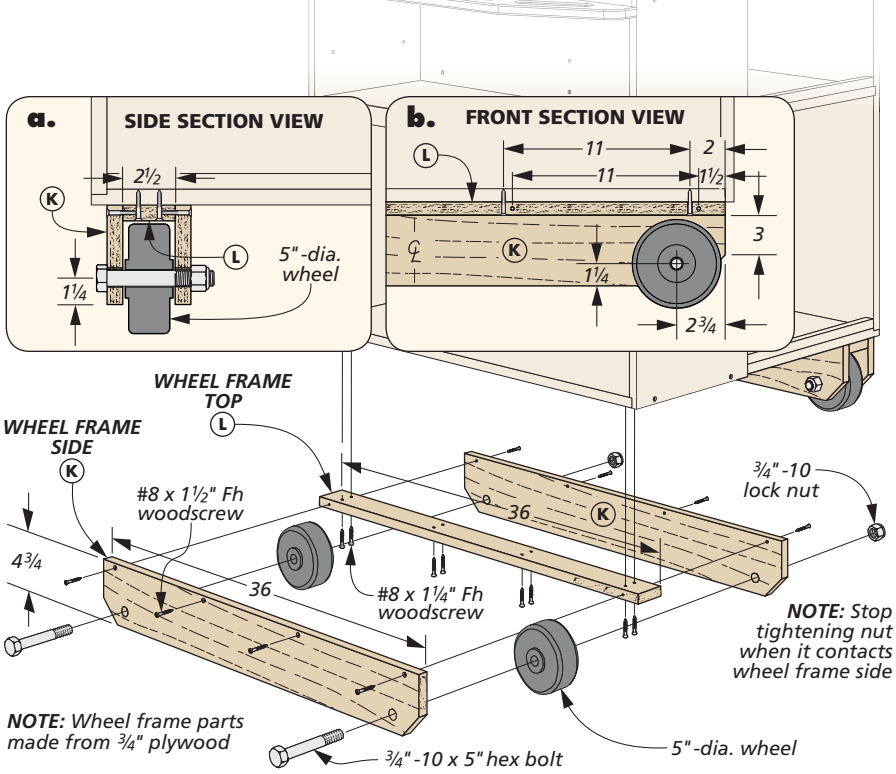


The frame sides require just a little more work. After cutting them to size, I knocked off the lower corners at the table saw (Figure 1 below). I stacked the two sides together before stepping over to the drill press. Here, you'll drill the holes for bolts that serve as axles for the wheels, as in Figure 2. This ensures the holes are drilled straight and will align after the frames are assembled.

Fasten the frame assemblies to the bottom of the cabinet using screws. When adding the wheels, be sure to just snug up the lock nut to the side of the frame. It's important not to overtighten the nut, as this could distort the frame assembly and pinch the wheels.

## How-To: CUT & DRILL ROLLER FRAMES

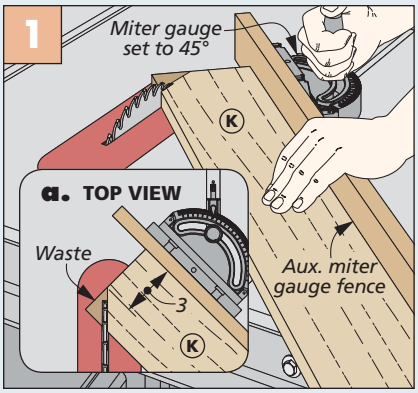


**Beveled Ends.** Cut the bottom corners of the roller frame sides to 45° at the table saw.

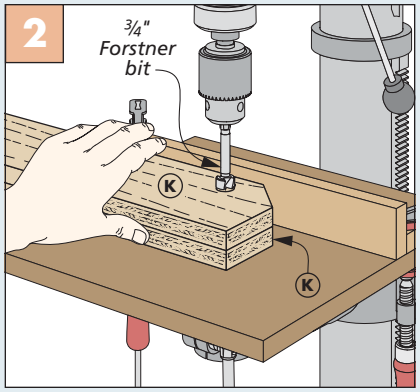


**Axle Holes.** Stack the wheel frame sides together before drilling the through holes for the axle bolts.

### SLAB DOORS

At this point, call in a helper or two to assist in setting the cabinet upright before working on the doors. The doors couldn't be easier to make: Just cut them to size, round the edges, and paint them.

Surface-mounted hinges make installing the doors a fairly straightforward process, but there are a couple of things I want to point out. The first is to use spacers to properly position the doors vertically. The left drawing on the next page provides the details on the spacer I used for the upper doors. To temporarily support the bottom doors, I clamped a board across the wheel frame flush with the lower edge of the bottom.

**INSTALLING HINGES.** When installing the hinges, I found it easier to mount them to the cabinet first. The front edge of the hinge leaf on the cabinet side is flush with the front edge of the cabinet. This provides the proper clearance to prevent binding when opening the doors.

You can reach into the cabinet and use a self-centering bit to drill pilot holes for the door hinge leaf. Drive one screw tight before opening the door to make any final adjustments for a good fit and an even gap between the doors.

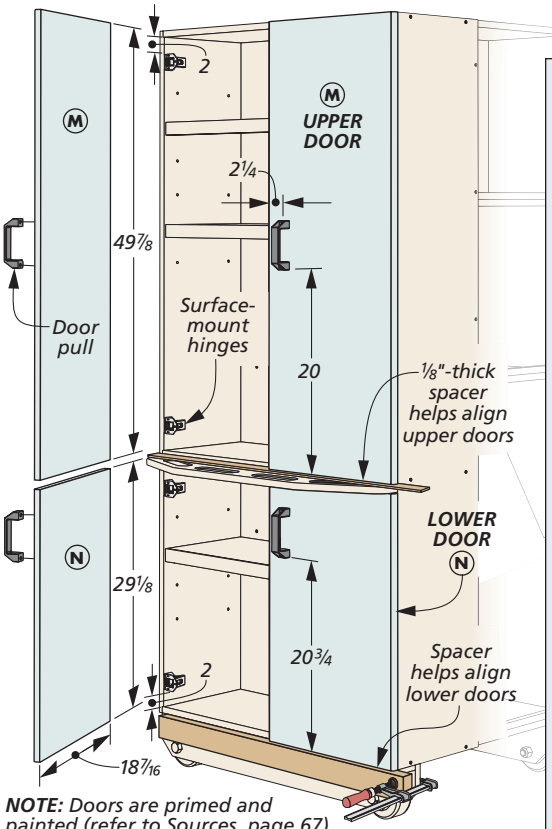


*NOTE: Doors are primed and painted (refer to Sources, page 67). Cabinet is finished with spray lacquer*

## How-To: PEGBOARD OPTION

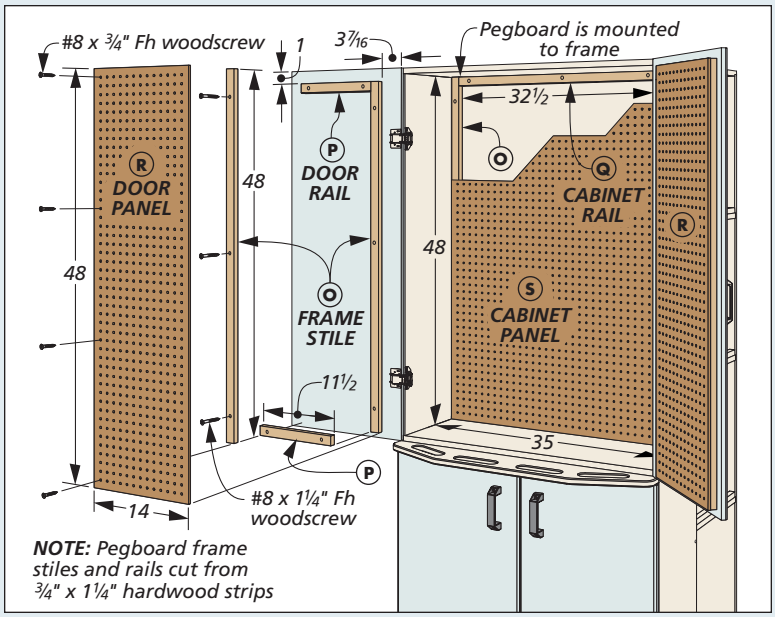


**Optional Pegboard Storage.** Instead of using adjustable shelves for storage, you can line the inside of the upper doors and cabinet back with pegboard. The pegboard is fastened to hardwood frames.

**DOOR PULLS.** The plastic door pulls are easy to mount with a couple of sheet metal screws. Just make sure to drill pilot holes before driving the screws.

### STORAGE OPTION

If you've opted for adjustable shelving, you can put the locker to use right away. For pegboard storage, however, there's just a little more to do.

**PEGBOARD FRAMES.** The How-To box above shows how pegboard mounted on the inside of the upper doors and partition provide a lot of real estate for storing tools and other items. Mounting the pegboard is simply a matter of cutting rails and stiles to size to create a mounting frame for the pegboard.

**MOVING THE LOCKER.** If you need to move the locker into another room through a door, simply remove the handle, tip it over and "wheelbarrow" the locker to its final place. I bet it won't take you long to fill it up. W

## Materials, Supplies & Cutting Diagram (for one locker)

| | | |
|---|---|---|
| **A** | Partition/Back (2) | ¾ ply. - 36 x 79 |
| **B** | Top/Bottom (2) | ¾ ply. - 30 x 36 |
| **C** | Sides (2) | ¾ ply. - 12¾ x 80 |
| **D** | Front Fixed Shelf (1) | ¾ ply. - 12¼ x 36 |
| **E** | Rear Shelves (3) | ¾ ply. - 17 x 36 |
| **F** | Rear Dividers (2) | ¾ ply. - 17 x 19⁹⁄₁₆ |
| **G** | Adj. Shelves (4) | ¾ ply. - 11½ x 35¼ |
| **H** | Shelf Edging (4) | ¾ x 1½ - 35¼ |
| **I** | Handle (1) | ¾ ply. - 10 x 37 |
| **J** | Rear Shelf Lips (8) | ¾ x ¾ - 16½ |
| **K** | Wheel Frame Sides (4) | ¾ ply. - 4¾ x 36 |
| **L** | Wheel Frame Tops (2) | ¾ ply. - 2½ x 36 |
| **M** | Upper Doors (2) | ¾ ply. - 18⁷⁄₁₆ x 49⅞ |
| **N** | Lower Doors (2) | ¾ ply. - 18⁷⁄₁₆ x 29⅛ |
| **O** | Pgbd. Frame Stiles (6) | ¾ x 1¼ - 48 |
| **P** | Pgbd. Door Rails (4) | ¾ x 1¼ - 11½ |
| **Q** | Pgbd. Cab. Rails (2) | ¾ x 1¼ - 32½ |
| **R** | Pgbd. Door Panels (2) | ¼ pgbd. - 14 x 48 |
| **S** | Pgbd. Cab. Panel (1) | ¼ pgbd. - 35 x 48 |

- (66) #8 x 1½" Fh Woodscrews
- (36) #8 x 1¼" Fh Woodscrews
- (32) #8 x ¾" Fh Woodscrews
- (4) ¾"-10 x 5" Hex Bolts
- (4) ¾"-10 Lock Nuts
- (4) 5" O.D. x ¾" I.D. Wheels
- (8) Surface-Mount Hinges w/Screws
- (4) Door Pulls
- (8) #14 x 1" Ph Sheet Metal Screws
- (20) ¼" Shelf Supports

*¾"x 5" - 72" Hard Maple (2.5 Bd. Ft.)*

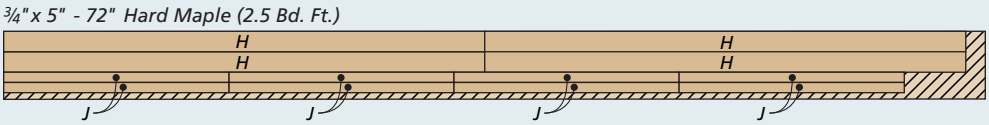


*¾"x 5½" - 60" Hard Maple (Two boards @ 2.3 Bd. Ft. each)*

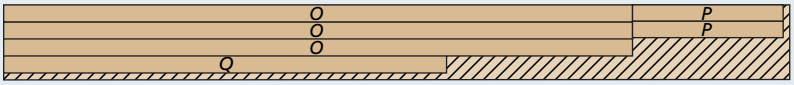


***ALSO NEEDED:***
*Five 48" x 96" sheets of ¾" birch plywood*
*One 48" x 96" sheet of ¼" pegboard*

Heirloom Project

# Rustic Farmhouse Table

If you prefer a comfortable, country look for your dining room, then this classic trestle table is sure to be a great choice for your home.

There's no hard and fast rule that a dining room table has to be formal. In today's changing world, many families are more comfortable having dinner in a casual setting, and this farmhouse table is the perfect spot. It's a unique look that offers a nice alternative to traditional, high-class dining room furniture.

**RUSTIC & STYLISH.** Though the look is more casual than most, this table still has a lot to offer. With its thick Douglas fir planks, a distressed finish, and sturdy mortise and tenon joinery, the table is certainly not lacking in style. And the trestle design of the table, with a wide base assembly that connects to the top, is a timeless look that's sure to please its users for years to come.

**DETAILS OF THE DESIGN.** If you've never built a table before, but have always wanted to, then this may be a good project to try your hand at. I started with dimensional lumber, so prepping many of the parts is as simple as ripping and crosscutting them to length. Several of the mortises are formed by cutting mating dadoes and then gluing parts together. And joining the tabletop and end assemblies with splines is a breeze.

**BENCH OPTION.** There's also a matching bench that's essentially a smaller version of the table. You'll find complete plans for the bench starting on page 52.

# Construction Overview / DIMENSIONS: 72"W x 30"H x 40"D (without leaves) 82"W x 30"H x 40"D (with leaves)

Tabletop glued up from planks of varying width using spline and groove joinery

Leaf fits between end cap and tabletop to expand table

End cap is screwed to extension rails and has a spline that fits a groove in the tabletop

Cross rail supports center of tabletop

Arms are built from two pieces, similar to the feet. Matching dadoes form mortises to accept tenons on outer uprights

Extension rails slide in notches in arms and are secured by bolts into threaded inserts

Arms secured to tabletop with lag screws

Middle upright joins to outer upright with splines that fit in grooves

Stretchers fit mortises in uprights

Foot pads with rounded edges prevent scratches on floor

Through tenons on ends of stretchers are secured to uprights with wedges

Added dowel reinforces end grain of tenon

Matching dadoes in uprights form mortises to accept stretchers

Outer uprights have tenons that fit the feet below and the arms above

Mating dadoes form mortises in feet after gluing two pieces face to face

**NOTE:** All parts are made from dimensional "two-by" Douglas fir lumber

▲ The upright assemblies at the table ends are joined by stretchers with through tenons. Wedges driven through mortises in the tenons lock them in place.

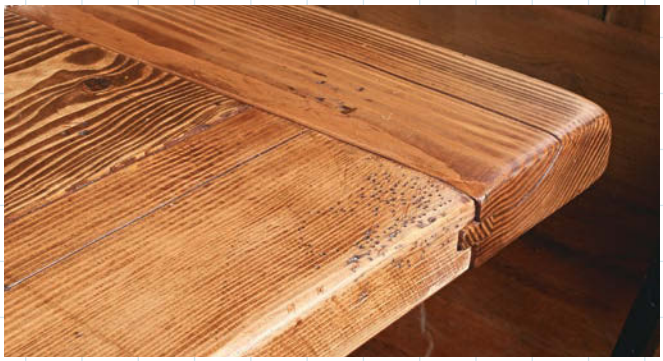

▲ The table has a unique distressed finish created by rounding corners with files and rasps and making holes with an awl. Refer to page 67 for more on the finish.

# Build a TABLE BASE

As with most tables, it's best to begin at the bottom and work your way up. And that starts with the table base. As you can see in the drawings on this and the next page, the base is made up of two end assemblies. Each one is formed from a foot with pads joined to uprights with mortise and tenon joints.

**A WORD ABOUT LUMBER.** Before you get started, I wanted to talk a little bit about the lumber for this project. I used dimensional "two-by" stock for all the parts. I also didn't plane the boards beforehand. Considering this, you'll want to take some time at the home center or lumberyard to find the flattest, straightest boards you can. It's also a good idea to let them acclimate to your shop for a couple of weeks prior to cutting out your project parts.

**BEGIN WITH THE FEET.** Once your lumber is on hand and ready for the project, you can start with the feet shown in the drawing at right. Dimensional lumber has rounded edges, so you'll want to joint or rip those edges off before you begin prepping your parts. Then cut the two halves of each foot to final size.

The mortises in the middle of the feet come next. These are formed by cutting matching dadoes in each half. The lower left drawing shows the setup I used.

At this stage, you're ready to glue the feet together. It's a good idea to insert some waxed spacers in the mortises to ensure that they align (lower middle drawing). Then you can lay out and cut the tapers at each end of the feet (lower right drawing). Band saw cuts are usually rough, so I sanded the tapers smooth. I finished up by forming roundovers along all the ends and edges of the feet except the bottom.

**FOOT PADS.** Pads with rounded edges elevate the feet and prevent floor scratches. These simply get cut to size out of a thicker board and beveled along the inside edge before rounding the edges. Center the pads under the feet and drive in screws. Make sure the screws are recessed below the wood surface.

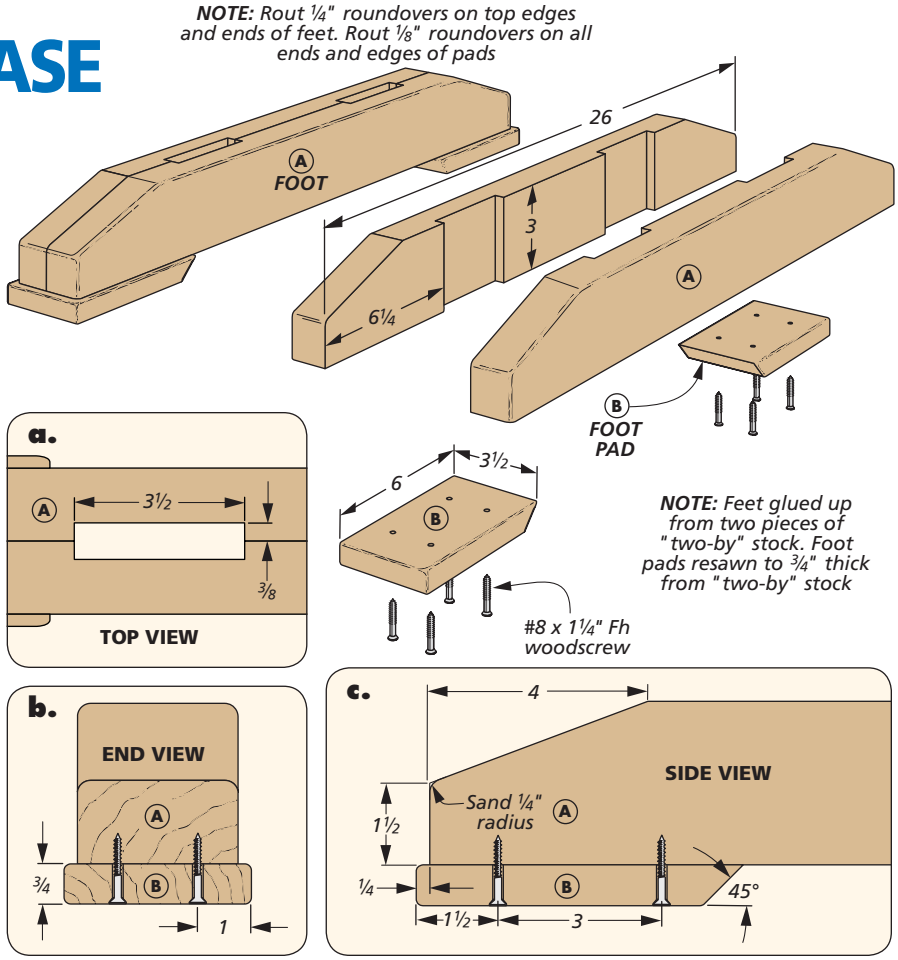


## How-To: MAKE THE FEET

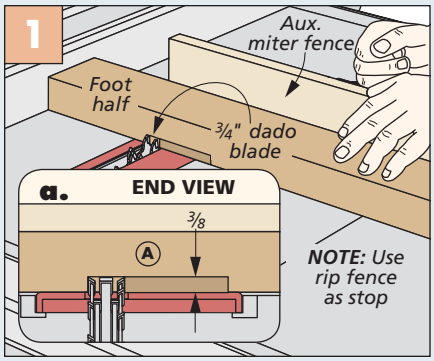


**Dadoes.** Cutting the dadoes requires a few passes. Cut all four parts at one rip fence setting, flip end for end, and repeat.

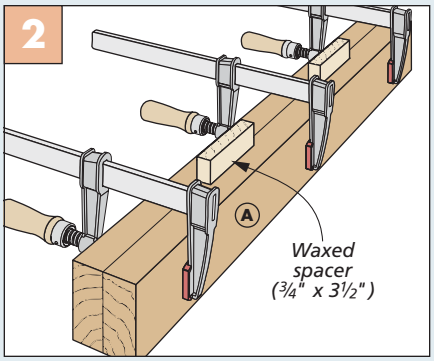


**Spacers.** Waxed spacers help to keep the dadoes lined up to form mortises as you glue and clamp up the feet.

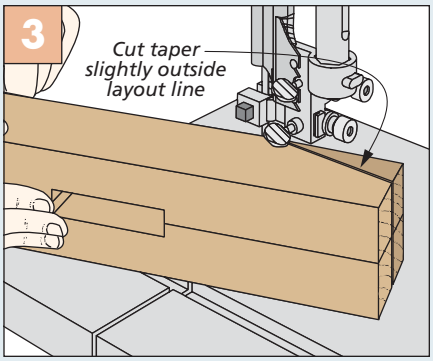


**Tapers.** Lay out and cut the tapers on the feet at the band saw. Stay outside the line, then sand them smooth.

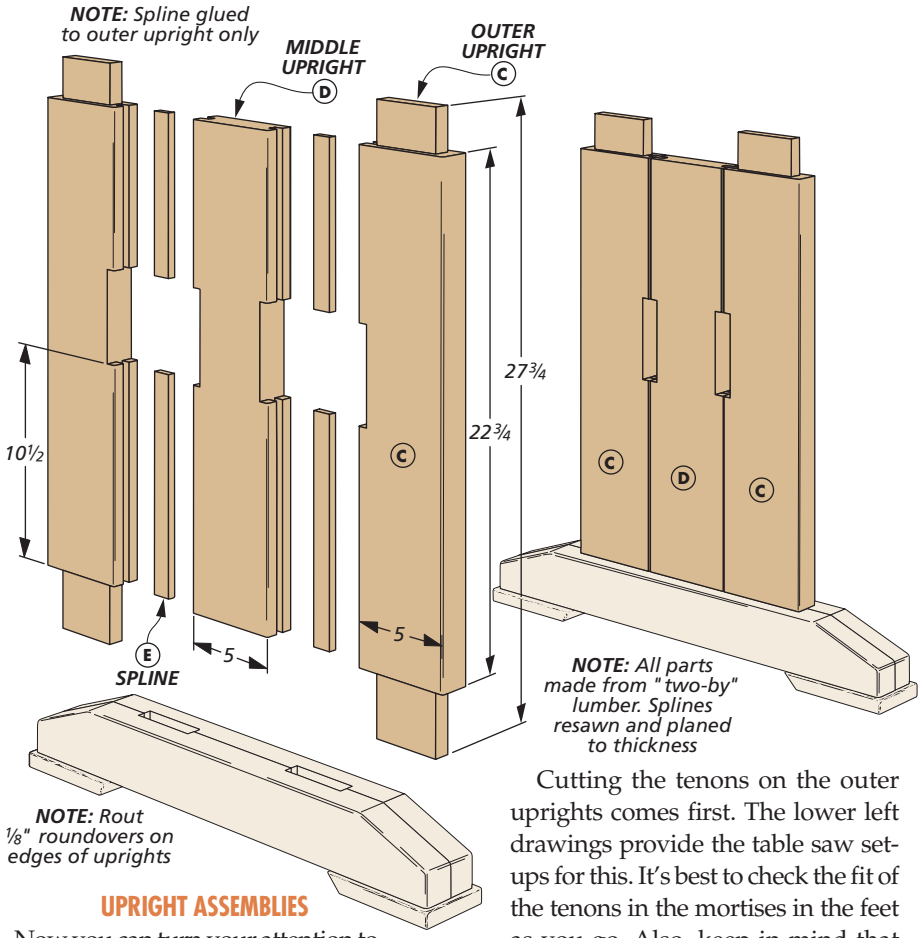


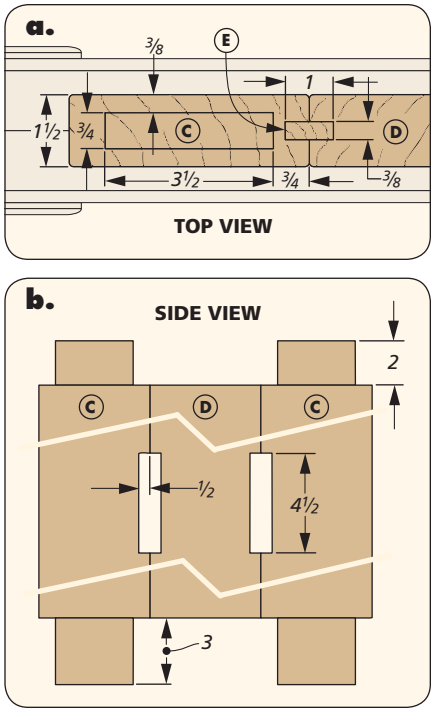


## UPRIGHT ASSEMBLIES

Now you can turn your attention to the upright assemblies. As shown above, each end has two outer uprights and a middle upright joined with splines. Like the feet, they have dadoes in the center that, when put together, form mortises for the stretchers. The outer uprights have tenons that fit the mortises in the feet below, as well as the arms above. (You'll size and cut the arms to fit the mortises on the following page.)

Cutting the tenons on the outer uprights comes first. The lower left drawings provide the table saw setups for this. It's best to check the fit of the tenons in the mortises in the feet as you go. Also, keep in mind that the tenons on the bottom are longer than those at the top. I used a spacer block on my rip fence to help keep the cuts consistent. Page 65 has all the details.

Cutting the dadoes in the uprights is similar to the feet on the previous page. The difference is keeping the shorter, middle upright aligned for this cut. To help with this, I made another spacer block for my rip fence (refer to page 65).

All that's left before joining the uprights is routing the slots in the edges (lower right drawing). There's an article on page 12 that will help walk you through this process.

**TIME FOR ASSEMBLY.** I resawed and planed some scrap Douglas fir down to make splines to fit between the uprights. Once you get a nice fit, you'll glue these into the outer uprights and sandwich the middle upright between the two. Then brush glue on the tenons at the bottom of the upright assembly, and glue and clamp the assembly in place in the mortises in the feet.

## How-To: CUT TENONS & SLOTS

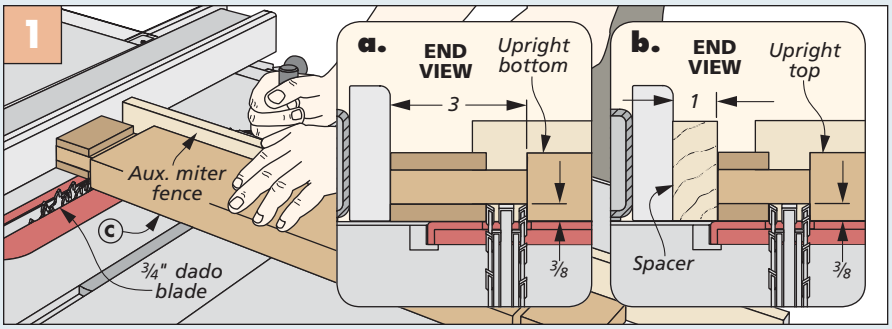


**Tenons.** Set the rip fence as a stop for cutting the tenon shoulders, and back up the cut with an auxiliary miter gauge fence. After cutting the shoulders, slide the piece away from the rip fence and remove the rest of the waste to complete them.

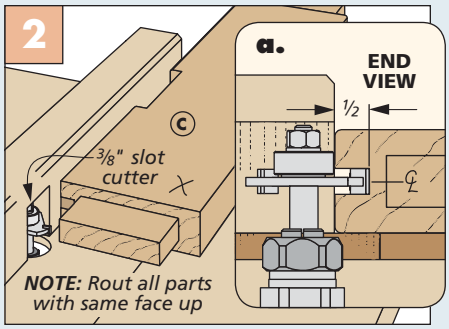


**Grooves.** A router table equipped with a slot cutter makes quick work of the mating grooves in the upright edges.

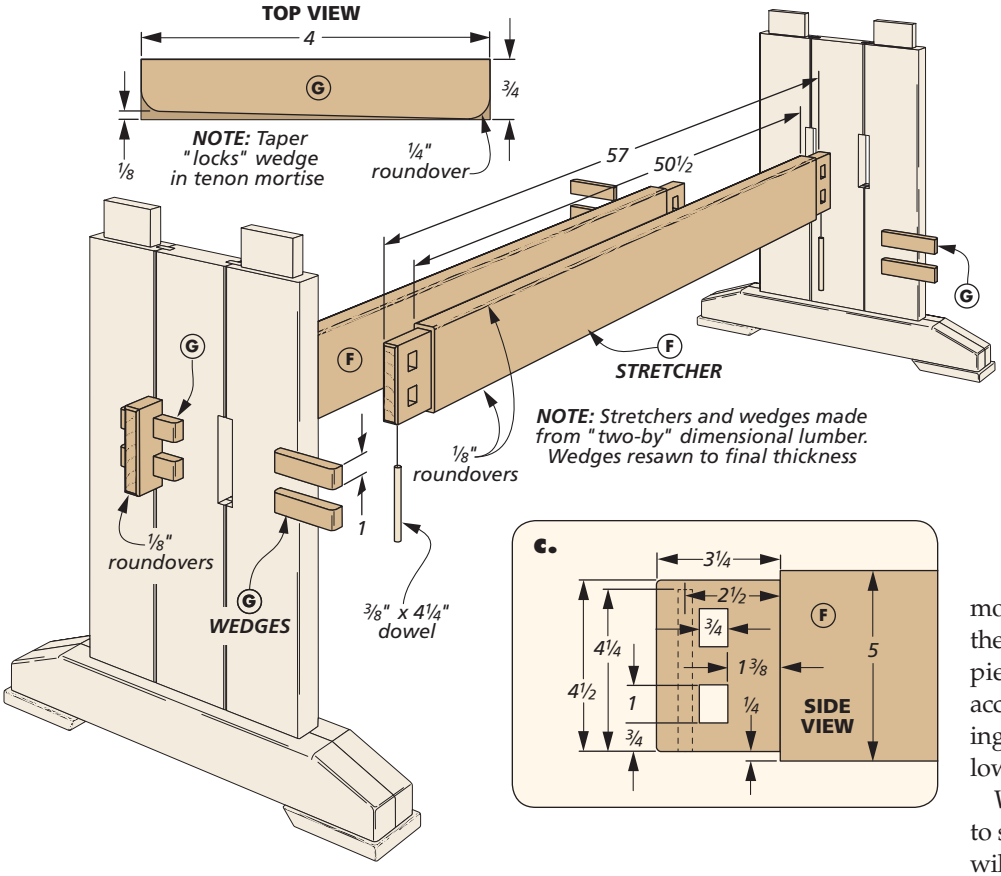





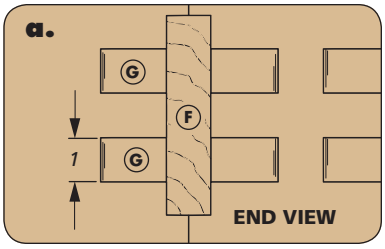


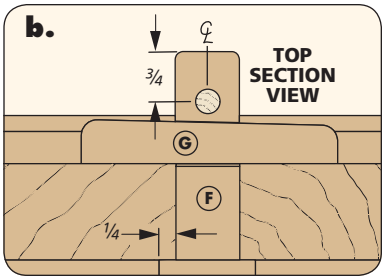


# Add the STRETCHERS & ARMS

Now that you have the end assemblies complete, the next steps involve connecting them with two stretchers. The stretchers have long tenons on the ends that extend through the mortises in the uprights. Wedges driven through mortises near the ends of the stretchers secure them and add a decorative touch.

**STRETCHERS.** Like the other parts, the stretchers are cut from dimensional lumber. Next you can cut the tenons on the ends of the stretchers. This is done in a similar fashion to the tenons on the outer uprights.

Douglas fir is a fairly soft, straight-grained wood. So before I cut the mortises in the stretcher tenons to accept the wedges, I reinforced the ends of the pieces to prevent splitting. This was accomplished by drilling a hole and gluing and tapping in a dowel (refer to the lower left drawing).

With the dowels added, you're ready to start on the rectangular mortises that will accept the wedges. That begins with drilling holes at the drill press. Since the holes are in the tenon, you'll need to back up the piece to prevent blowout on the bottom (lower middle drawing).

A little chisel work squares off the mortises. Then I sanded a slight taper on the outside cheek of the mortise that angles toward the inside face of the tenon (lower right drawing). This allows the wedges to fully seat in the mortises and also draws the uprights tight to the stretchers.

## How-To: THROUGH TENON JOINTS

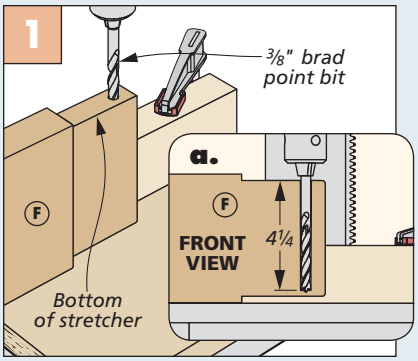


**Dowel Hole.** Drill a hole near each end of the stretcher to accept a dowel for reinforcing the tenon.

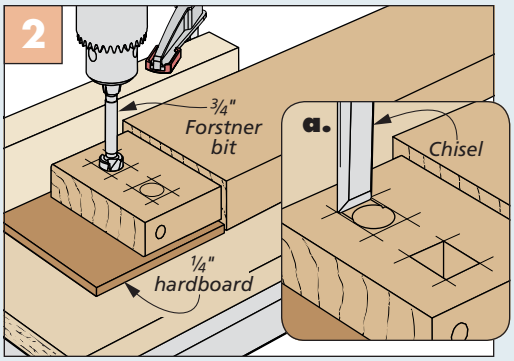


**Mortises.** Mortises in the stretcher tenons accept wedges. Start by drilling holes for these mortises with a Forstner bit.

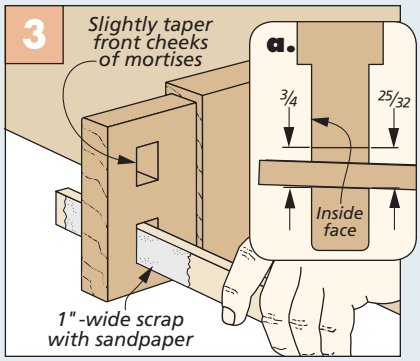


**Taper.** After squaring the mortises with a chisel, sand a slight taper on the outer face of each mortise.

Finally, I rounded the ends and edges of the stretchers, including the tenons, before moving on.

**WEDGES.** You need to make eight wedges to lock the stretchers to the uprights. After cutting these, sand a slight taper on one edge (Top View, previous page). Then assemble the base of the table by inserting the stretchers between the legs and lightly tapping in the wedges.

## ARMS & CROSS RAILS

The tabletop is connected to the uprights with two arms. These arms are each made up of two pieces and are built similarly to the feet. While you're at it, you can cut the cross rail to size, as well. It's the same size as one of the arm halves (main drawing at right).

Mortises in the arms fit over the tenons at the top of the uprights. Like the feet, these are made by cutting matching dadoes in the two halves of the arms. When you glue the arm halves together, it forms the mortises between them.

**HOLES.** Next are a series of counterbored holes in the bottom edges of the arms and cross rails (details 'b' and 'c'). These are used to secure the tabletop with lag screws. The arms have a second set of holes on their inside faces. These holes let you secure the arms to the uprights with bolts and nuts. (Later on, this hardware will allow you to remove the top easily for moving the table.) The holes pass through the mortises in the arms, so you'll want to insert a spacer before drilling these holes to prevent blowout.

After drilling all the holes, you'll cut the tapers on the arms and cross rails at the band saw, just as you did for the feet.

**DADOES.** There's one more operation to perform on the arms before adding them to the table. And that's to cut a pair of dadoes across the upper edge of each (lower right drawings). These allow a pair of extension rails to slide in and out for expanding the tabletop.

Now slide the arms in place over the tenons on the uprights. To transfer the holes from the arms to the tenons, drill through the holes in the arms with a hand drill. Finally, secure the arms with bolts, washers, and nuts. (Don't use glue here to allow table disassembly later.)

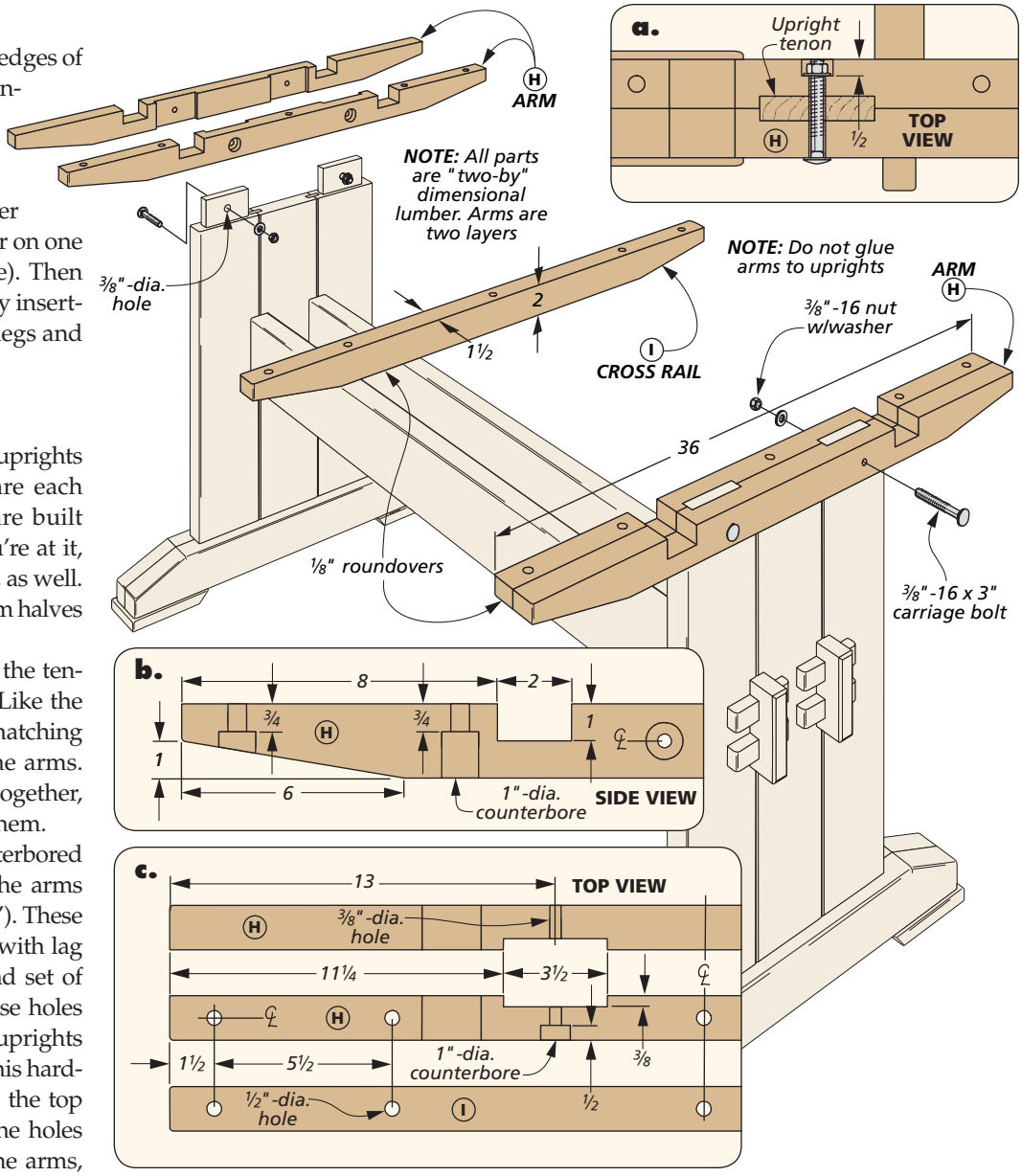


## How-To: CUT DADOES

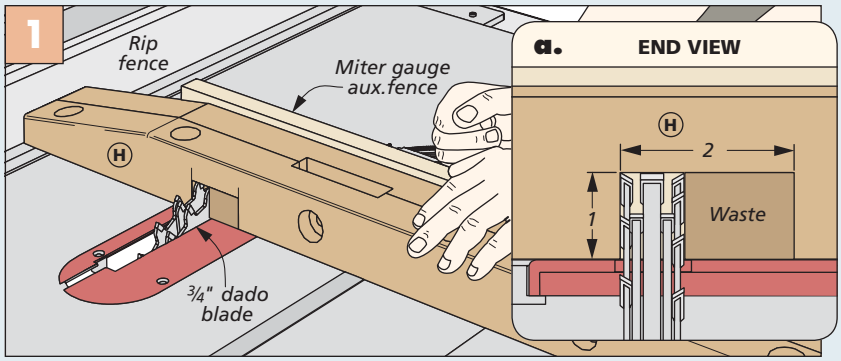


**Dadoes.** A pair of dadoes on the upper edges of the arms will accept extension rails later on. Cut these with a dado blade, flipping the piece end for end between passes. Then adjust the fence to complete the dadoes.

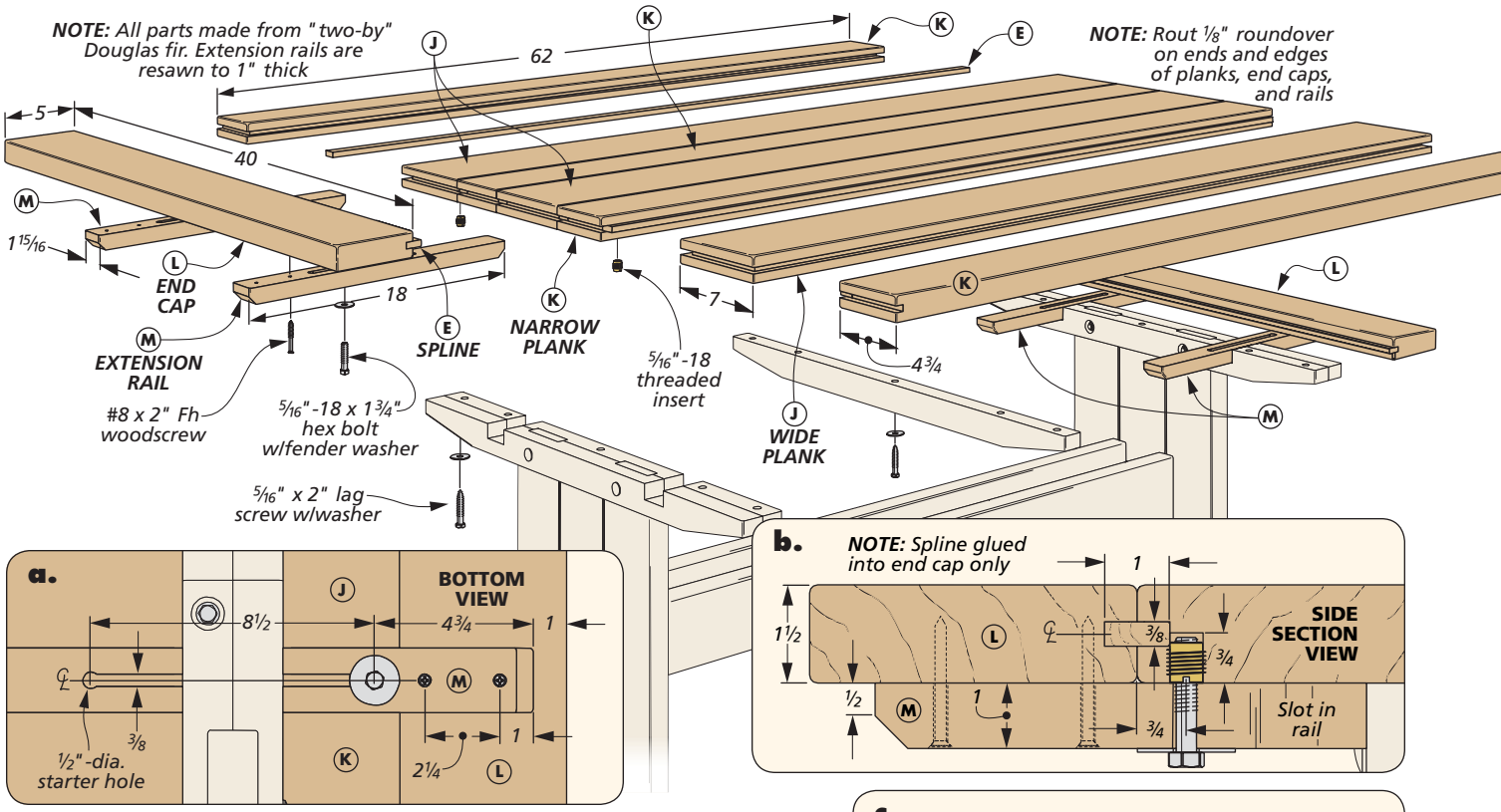


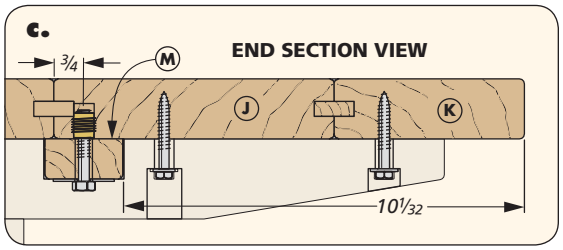


# Completing the TABLETOP

The charm of this table really comes through when you add the top. It's a large, thick panel made up of Douglas fir planks of alternating widths (drawing, above). Like the uprights, the pieces are joined together with splines that fit into grooves to help keep the table flat and prevent the joints from opening up.

**MAKE THE TOP.** You'll notice in the photo on page 44 that I intentionally left some knots and other imperfections on my tabletop. I thought this added to the rustic appeal of the table. Feel free to select boards for the look you desire. Cut them all to size and round over the edges and ends with a roundover bit in your router.

Next, I cut slots in the edges of the boards to accept splines. Due to the size of the planks, I made these cuts with a hand-held router rather than at the router table (box at left). The article on page 12 offers more guidance. After that, it's a matter of cutting splines to fit the slots and gluing the whole top together.

**ADD END CAPS.** To form a solid connection with the end caps, I also routed slots in the ends of the assembled tabletop (left drawings). While the router is still set up, it's a good time to cut the slots in the end caps, as well. So go ahead and cut the end caps to size, cut slots that match those in the top, and then round the ends and edges. Finally, glue splines into the slots in the edges of the end caps, but don't glue the end caps to the tabletop.

**ASSEMBLY.** With the top complete, recruit a friend to help you flip it upside-down on a benchtop. Then flip the table base over and center it on the top. Drill pilot holes, and drive lag screws through the arms to secure them. You can also position and install the cross rail now.

## How-To: ROUT THE SLOTS

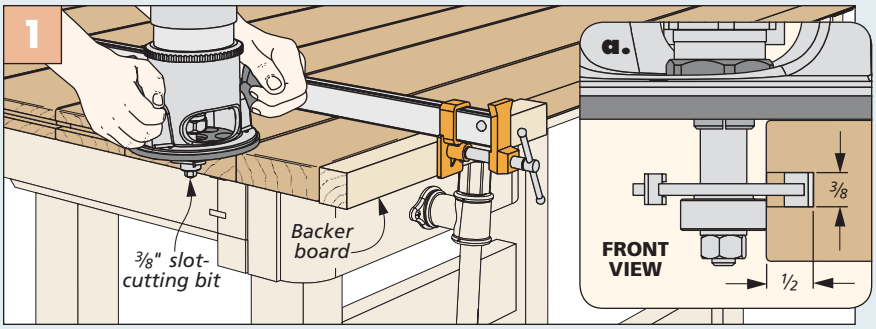


**Routing Slots.** Use a slot-cutting bit in a hand-held router to cut the slots for splines in the edges of the planks, as well as the ends once it's assembled (drawings above). The backer board prevents chipout at the corners of the tabletop.

**EXTENSION RAILS.** To accommodate the leaf and expand the table, the end cap slides on extension rails at each end of the table. You'll cut these to slide smoothly in the dadoes in the arms, as shown in the main drawing on the previous page. Then bevel the ends and round the corners of the rails.

To allow the rails to slide smoothly and also stay tight with the top, they feature slots that accept bolts and washers. The bolts are installed in threaded inserts in the underside of the top. Cutting the slots in the rails is a matter of drilling two oversized starter holes and routing between them with a series of passes (detail 'a', previous page).

After that, you can slide the rails into the dadoes in the arms. Then position the end caps against the tabletop and rails and install them with screws. Now mark the locations for the threaded inserts (details 'b' and 'c', previous page). Drill the holes, install the inserts, and add the rails by loosely threading on the bolts with washers.

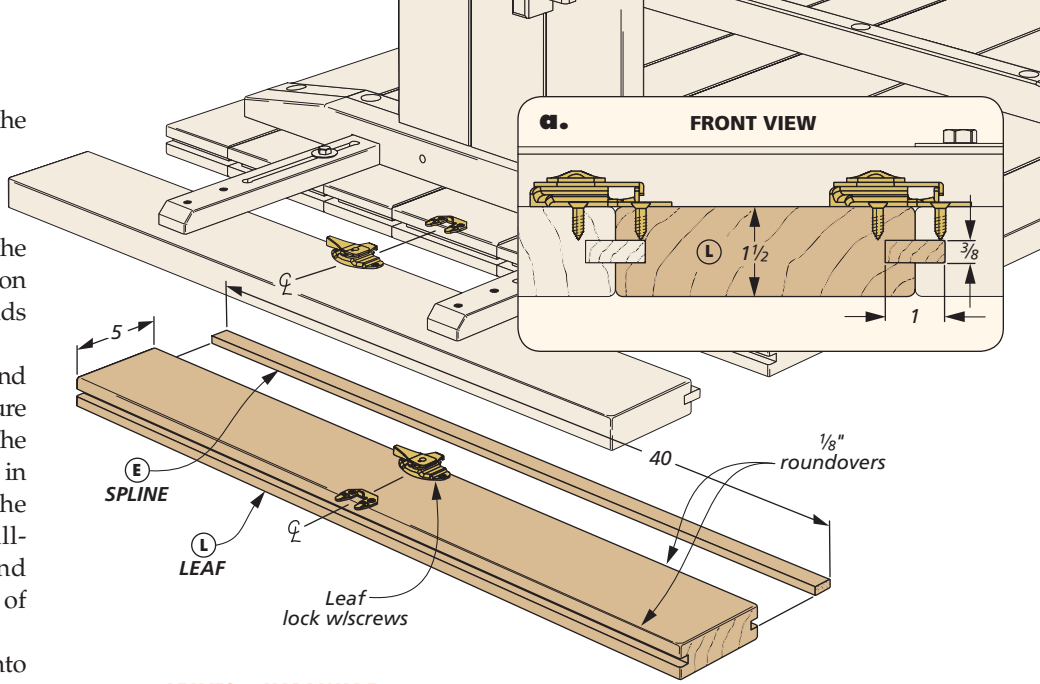


## LEAVES & HARDWARE

The table's leaves aren't large, but they'll let you get two more chairs around the table. You can see how to make them and add the leaf lock hardware in the drawings above.

The leaves are the same size as the end caps but have a mating slot routed on both edges. You'll glue a spline into the slot facing toward the tabletop.

**FINISHING UP.** The distressed finish for the table involves a combination of stain and glaze (page 67). Now all the table needs is a bench or two for seating. Turn the page to get started on those. W

## Materials, Supplies & Cutting Diagram

| | | |
|---|---|---|
| **A** | Feet (2) | 3 x 3 - 26 |
| **B** | Foot Pads (4) | ¾ x 3½ - 6 |
| **C** | Outer Uprights (4) | 1½ x 5 - 27¾ |
| **D** | Middle Uprights (2) | 1½ x 5 - 22¾ |
| **E** | Splines | 1 x ⅜ - 600 rgh. |
| **F** | Stretchers (2) | 1½ x 5 - 57 |
| **G** | Wedges (8) | ¾ x 1 - 4 |
| **H** | Arms (2) | 3 x 2 - 36 |
| **I** | Cross Rail (1) | 1½ x 2 - 36 |
| **J** | Wide Planks (3) | 1½ x 7 - 62 |
| **K** | Narrow Planks (4) | 1½ x 4¾ - 62 |
| **L** | End Caps/Leaves (4) | 1½ x 5 - 40 |
| **M** | Extension Rails (4) | 1 x 1 15/16 - 18 |

- (16) #8 x 1¼" Fh Woodscrews
- (1) ⅜"-dia. x 24"-long Dowel
- (4) ⅜"-16 x 3" Carriage Bolts
- (4) ⅜" Washers
- (4) ⅜"-16 Nuts
- (15) 5/16" x 2" Lag Screws
- (15) 5/16" Washers
- (8) #8 x 2" Fh Woodscrews
- (4) Leaf Locks
- (4) 5/16"-18 Threaded Inserts
- (4) 5/16"-18 x 1¾" Hex Bolts
- (4) 5/16" Fender Washers

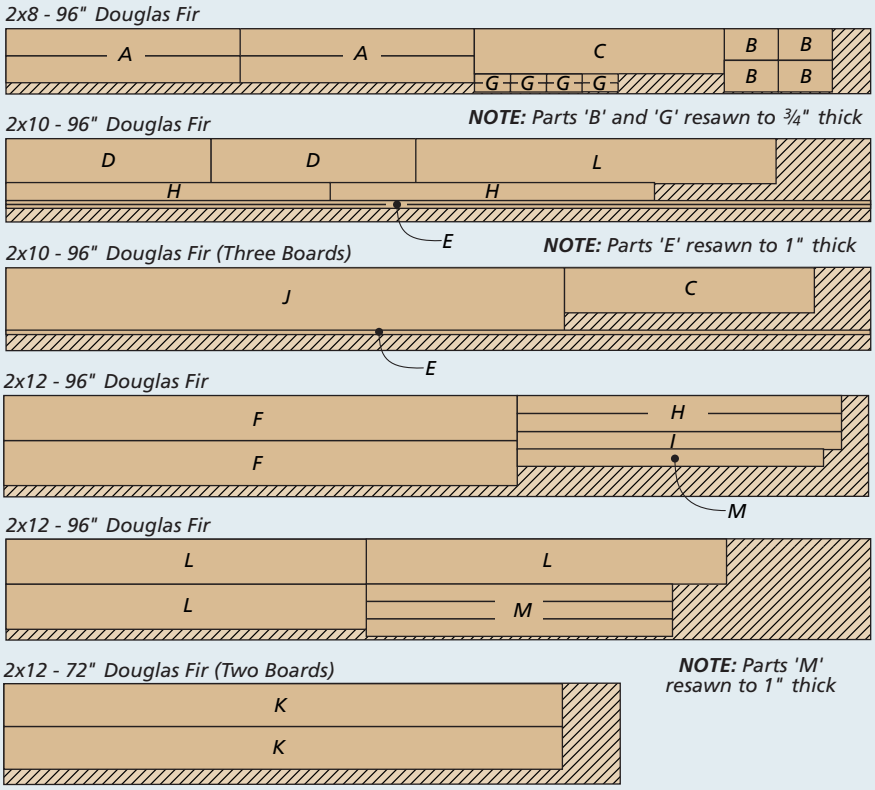

# Matching **RUSTIC BENCH**

By the time you build the farmhouse table, making a matching bench (or two) should be a walk in the park. Essentially, it's like a smaller version of the table. Along those lines, a good portion of the construction sequence is the same as before. In fact, it might be a good idea to build the bench along with the table so that you can use the same tool setups for a number of the construction techniques.

**BENCH FEET.** Like the table, the bench has a pair of feet with foot pads at the bottom. And, as before, matching dadoes in the two halves of the feet come together to form mortises that accept tenons on the uprights.

As you can see in the drawings below, the bench feet are narrower, as well as shorter, than the feet on the table. The mortises and tapers are a bit different as a result. By paying close attention to the dimensions shown in the drawings below, you can cut the feet using the same techniques described for the table in the "How-To" drawings at the bottom of page 46.

**UPRIGHT ASSEMBLIES.** While the two end assemblies of the table each have three

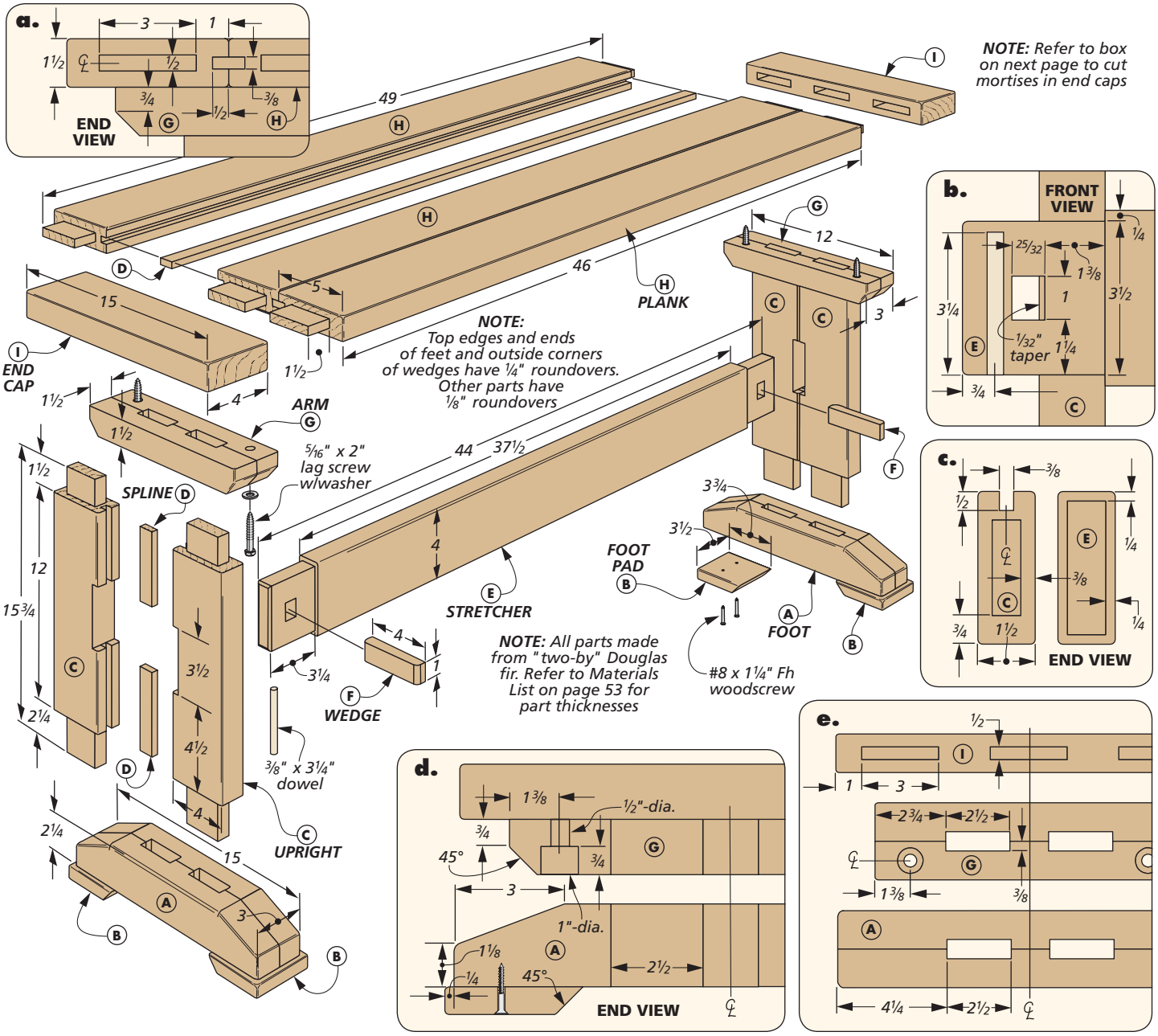

## How-To: LAY OUT & CUT MORTISES

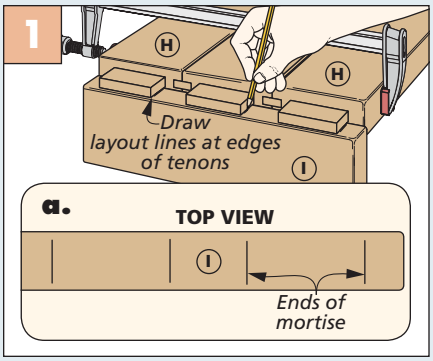


**Transfer.** Hold the planks together with a clamp, and lay them across the end caps to mark the mortise locations.

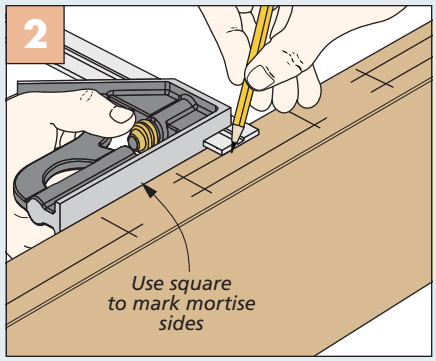


**Layout.** Now use a square and a pencil to complete the mortise layouts by connecting the ends to one another.

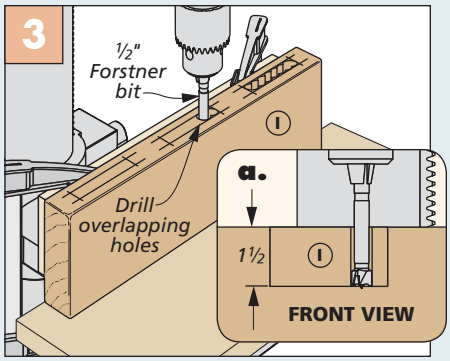


**Drill.** A Forstner bit chucked into the drill press is the ideal tool for boring out the mortises in the end caps.

uprights, the ends of the bench just have two — and both have tenons on the ends. Like the table, the uprights feature dadoes on their inside edges that match up to form a mortise for the stretcher. They're also joined at the center with hardwood splines that fit into mating grooves.

**STRETCHER.** A single stretcher fits between the two uprights, and it's locked in place by one wedge at each end. Here again, you can refer to page 48 for guidance on making the stretchers and the wedges that fit in them.

**ARMS.** The arms of the rustic farmhouse bench also probably look pretty familiar. Other than being shorter and narrower than the table arms, the key differences are that you won't need any notches, since the bench doesn't have extension rails. You'll also drill only two counterbored holes instead of five for the lag screws and washers that will be used to attach the benchtop later on (details 'd' and 'e').

**BENCHTOP.** Perhaps the biggest difference in the bench is at the top. While the table featured seven planks that alternate in width from one to the next, the benchtop has three planks that are all the same size. As before, they're rounded over on the edges and ends and then joined with splines that fit in grooves. The planks aren't glued together, but rather they are simply fit together before adding the end caps to secure them.

The end caps of the planks are also a bit different than the table. Since there aren't any leaves to contend with on the bench, I opted for a traditional mortise and tenon joint here. You'll want to cut the tenons on the ends of the planks at the table saw prior to fitting the planks to one another with splines. Then you can lay out and cut the three mortises in each end cap at the drill press to fit over the tenons. The drawings shown in the box above will walk you through the process. Once you achieve a nice fit between the end caps and planks, you can use long clamps to draw the joints together with glue.

I used the same distressing techniques on the bench before applying stain, glaze, and finish. You'll find all the details that you need to distress and finish the bench on page 67. Once you get it all finished, you can slide your bench (or benches) in place beside the table and get ready to eat. W

## Materials, Supplies & Cutting Diagram (for one bench)

| | | |
|---|---|---|
| **A** | Feet (2) | 3 x 2¼ - 15 |
| **B** | Foot Pads (4) | ¾ x 3½ - 3¾ |
| **C** | Uprights (4) | 1½ x 4 - 15¾ |
| **D** | Splines | 1 x ⅜ - 110 rgh. |
| **E** | Stretcher (1) | 1½ x 4 - 44 |
| **F** | Wedges (2) | ¾ x 1 - 4 |
| **G** | Arms (2) | 3 x 1¾ - 12 |
| **H** | Planks (3) | 1½ x 5 - 49 |
| **I** | End Caps (2) | 1½ x 4 - 15 |

- (8) #8 x 1¼" Fh Woodscrews
- (1) ⅜"-dia. x 12"-long Dowel
- (4) 5/16" x 2" Lag Screws
- (4) 5/16" Washers

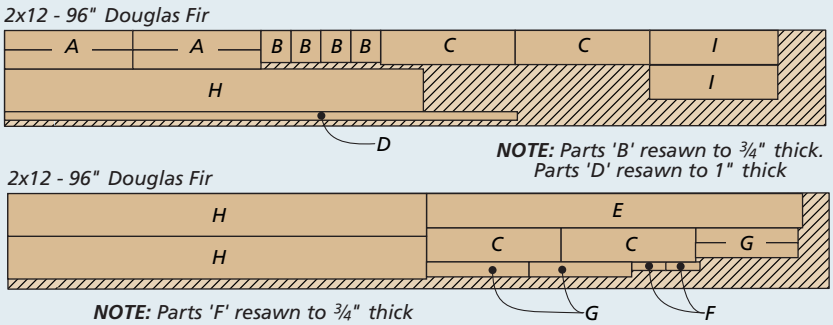

# creating perfect Band Saw Tenons

Recently, I was in the shop cutting tenons for a project when Phil Huber, one of our senior editors, walked in. I explained how a band saw is ideal for cutting tenons, but getting consistent results can be tricky. Phil showed me a method he uses to cut perfect tenons on the band saw. The simplicity of his technique, and the results, really surprised me.

The beauty of this system is that after the initial setup to cut the first tenon, the tenons will always be a consistent thickness on the remaining parts. The secret is in a notched block of wood.

**GAUGE BLOCK.** This block serves as a gauge to set up the two fence positions required for cutting the cheeks of a tenon. The width of the notch on the block equals the width of the mortise, which ultimately determines the thickness of the tenon. In the lower left photo, you can see how I use a hollow chisel from the mortiser to ensure the notch is the correct width for sizing the tenon. This is the same chisel I use to cut the mortises in all of the workpieces. You'll need to make a separate gauge block

▲ The key to accurate tenon thickness is using the tool you use to create the mortises, such as a chisel from the mortising machine, as a guide for sizing the width of the notch in the gauge block.

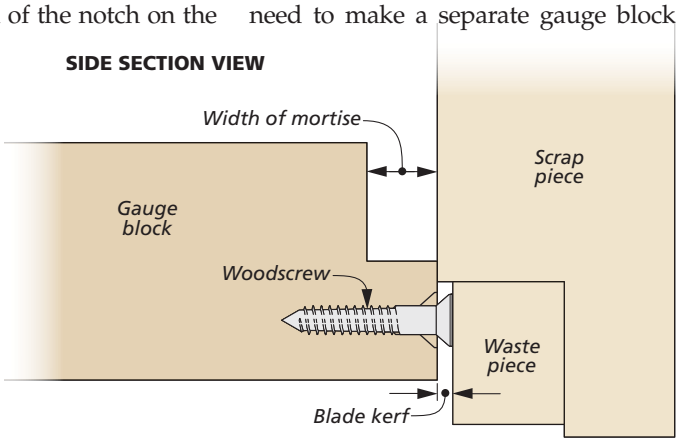


**Screw Height Adjustment.** Cut a kerf partway into a scrap piece, cut the waste free, then close the kerf to create a "step" to use as a guide for adjusting the screw.

for every mortise and tenon width you intend to make for your projects.

A woodscrew in the gauge block serves an important function: It accounts for the kerf created by the saw blade. You'll see how this works in a minute.

To set the correct depth of the screw, use the band saw to cut a notch in a scrap piece, as shown in the lower right illustration on the previous page. (You'll want to use the same blade you'll be using to cut the tenons.) Place the waste into the notch of the scrap piece to create an offset that precisely matches the width of the saw kerf. Use this offset to set the depth of the screw in the gauge block. (You'll fine-tune the depth later.)

**BAND SAW SETUP.** The first order of business is to lay out and cut the shoulders of the tenons on the workpieces. A table saw makes this task quick and accurate. Then you can head over to the band saw to cut the tenon cheeks.

The drawings on the right show how the gauge block is positioned between a fixed stop block and the rip fence on your band saw. It's a good idea to have a couple of test pieces on hand that are the same thickness as your final workpieces. This way, you can test the setup before making cuts in the actual workpieces.

To set the band saw fence location, place the workpiece against it and move the fence so the blade aligns with the waste side of the line for the tenon cheek, as shown in Figure 1. Lock the fence in this position and then place the gauge block on the opposite side with the notch facing down.

Clamp a stop block to the band saw table with the end of the stop block firmly against the inside of the notch. The stop block remains in this position through all of the cuts.

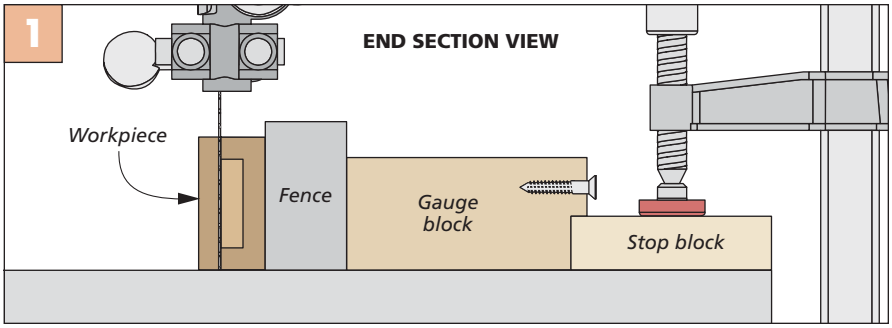


**First Tenon Cheek.** Align the first cheek cut on the blade and then position the gauge block, notch down, between the fixed stop block and the rip fence.

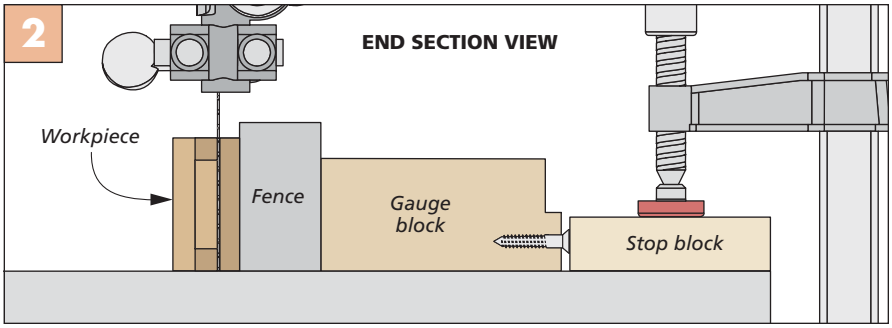


**Second Tenon Cheek.** Flip the gauge block over with the screw against the end of the stop block and then slide the fence against the gauge block.

**MAKING THE CUTS.** Make the first cut in a test piece to create the first tenon cheek, as in the photo below. Now you can flip the gauge block over and reposition the fence. It's important to ensure that the screw on the gauge block is tight against the stop block. Figure 2 and the main photo illustrate this setup and how it differs from the first step. As I mentioned before, the stop block remains clamped in place.

This automatically positions the workpiece to cut the second cheek of the tenon (main photo, previous page). You may need to tweak the depth of the screw to align the workpiece to ensure the blade is on the waste side of the layout line. (You'll only make this adjustment once for the blade you're using.)

**A SNUG FIT.** The ultimate goal is a snug fit of the tenon in the mortise. Once you have the setup tuned in, you can cut perfect-fitting tenons all day long. You can use the same setup (with a different gauge block) to cut the edges of each tenon. Or you can simply set the fence to make these last two cuts. The best part is, if you label each of the gauge blocks, your setup for the next project is sure to go a lot more quickly. W

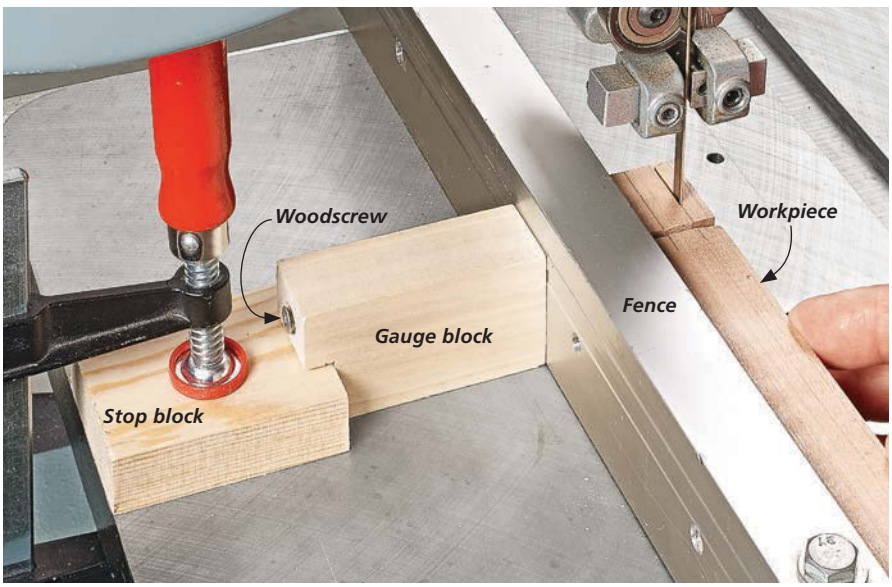


▲ The fence and workpiece are aligned to cut the first tenon cheek. The gauge block is set against the fence with the notch placed over a stop block clamped to the saw table.

# smooth curves with Sanding Drums

▲ Sanding drums come in two styles to accept either strips of regular sandpaper (above) or rigid sleeves (right photo).

Incorporating a few curves is a sure-fire way to add interest to your projects. The trouble is, creating a pleasing shape can be a challenge for many woodworkers used to projects that are mostly made up of square edges and straight lines.

In my experience, cutting the curve is the easy part. A band saw is an ideal tool for the task. The real trick is refining that curve into a smooth, even shape. For that, I turn to an inexpensive add-on for my drill press — a sanding drum.

**TWO STYLES.** As the name implies, this accessory is made up of a cylinder that's wrapped with an abrasive. They come in two styles. One type accepts strips of sandpaper, as shown in the far left photo. The advantage here is that you can use the same sandpaper sheets you probably already have in your shop.

The other style has a rubber cylinder that accepts a rigid sanding sleeve (near left photo). Tightening the arbor causes the cylinder to expand and press against the sleeve to hold it in place.

## USING SANDING DRUMS

Even though you can use coarse grits on a sanding drum, it's best to consider these as tools for refining rather than shaping curves. With that in mind, your

goal is to remove as much of the waste as possible before you head to the drill press and start up the sanding drum.

Minimizing the amount of waste saves time and makes it easier to end up with a smooth, even curve. At the band saw, try to cut as close to the layout line as possible. My aim is to leave less than 1/16" of waste to remove, as you can see in the photos on these pages.

**CONCAVE CURVES ONLY.** It might be tempting to refine convex curves with a sanding drum. But it's too easy to create divots. For these, your best bet is to stick with files and sandpaper.

**CHOOSE THE RIGHT DRUM.** On the concave curves, you'll get the smoothest results if you closely match the drum size to the radius of the curve. That means you may need to switch out sanding drums as you work. A sanding drum works best when it's running at a just-right speed (about 1200-1500 RPM). Too slow and it won't remove material efficiently. Too high and it can lead to burning.

Most sanding drums have a nub at the tip that extends beyond the end of the sleeve. So in order to sand the entire thickness of a workpiece, you need to recess the drum in a table. If your table doesn't have the option, take a look at the simple, shop-built version below.

With the right-size drum selected, the next part of the process is the technique. Since your goal is to create a smooth, fluid curve, the approach you use should match. Work down to the layout lines in a series of light passes, moving against the rotation of the drum from left to right, as shown in the left drawing.

Start with the areas where you have the most waste remaining. Use light pressure as you start and end each pass to blend the curves together. When you have an even amount of waste left to clean up, it's possible to take longer passes.

You'll notice sanding dust beginning to accumulate on the drum. To maximize the cutting ability of the sleeve, it's a good idea to clean it periodically with a crepe stick (lower right photo).

It won't take long for you to get into a rhythm using the drum. One key point to keep in mind is that the layout line serves as a visual guide for sanding. But to know when the curve is just right, I go by feel.

Close your eyes and run your fingers along the edge. You're much more likely to feel any slight lumps and bumps than you are to see them.

The final step is a little hand sanding. This touchup removes any noticeable scratches left by the sanding drum.

Shaping a flowing curve is a good way to add some detail to your next project. It's also a woodworking skill you can master in a short time. W

▲ Use the sanding drum that closely fits the radius of the curve. This gives you the best results for a smooth shape.

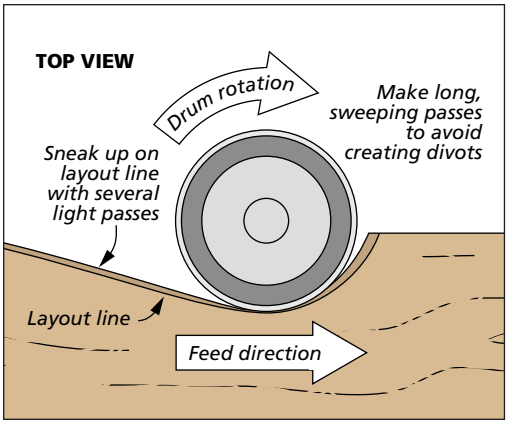


## How-To: AUXILIARY TABLE

I made this auxiliary table to recess a sanding drum below the surface and provide support for a workpiece. Long notches along one edge fit around my smallest and largest sanding drums. The table butts against the drill press fence and is clamped in place.

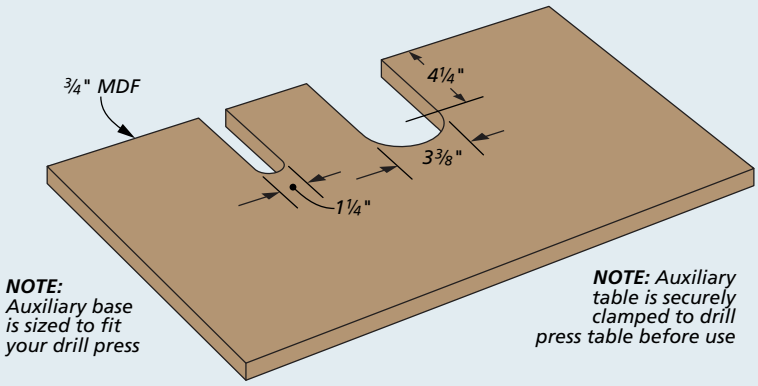

▲ Clear away built-up sanding dust by a holding a crepe stick against the spinning drum. This helps the abrasive lasts longer.

# getting ready for Glueup

You know the moment. It's the time when part or all of your project is ready for assembly. And frankly, you're a little anxious to start seeing it take shape. I find this time to be both exciting and a little nerve-racking.

I've had my share of projects go awry by being too eager to get things glued up. Over time, I've learned to slow down and think about what needs to happen in order to have a successful assembly. There are four areas you'll want to address before you start: the space, the gear you need, the dry run, and the clamps.

It's always a good idea to stop, take a deep breath, and plan the assembly steps with the same care you would plan out a tricky joinery operation.

**CLEAR SOME SPACE.** When I'm knee deep in a project, my shop can look, shall we say, "cluttered." At assembly time, disorganization and a pileup of tools and supplies can lead to misplaced parts or clamps. It can even keep you from having the best access to the assembly.

Thankfully, the solution is pretty simple. Take a few minutes to clear away some space on a flat worksurface. I'm not talking about a deep, spring cleaning. For me the time is well spent because I slow down and think through the next steps.

Most of the time, I use my workbench for assembling a project. Two other options are the top of a table saw or a sheet of plywood set up on sawhorses. No matter what you choose, it's a good idea to protect the top from glue drips. A piece of kraft paper is ideal for this task (left photo). I keep a roll in my shop for assembly as well as finishing tasks.

There are a couple of preparations to make. One of those is to keep a few pieces of lumber on hand. These are used to raise project parts off the benchtop to allow greater access for clamps.

In addition to the primary assembly area, I find that it's essential to have a nearby staging area for the glue, clamps, and parts. This can be as simple as rolling a cart up to the bench or having a small counter space close at hand.

▲ There's more to setting up an assembly area than freeing up space. Protect the worksurface with a sheet of kraft paper to catch glue drips. Then position the project parts, tools, and accessories you need close at hand to streamline the process.

Glue and a brush are good starting points. A mallet will help coax parts together. A square and tape measure let you check for square. And tape and waxed paper prevent glue from causing problems.

Long pipe clamps usually handle the main assembly. Add some shorter bar clamps to help align parts. Throw in a few hardwood cauls and supports to distribute pressure, and you're ready to go.

**GATHER YOUR GEAR.** Speaking of gear, on the surface it may seem that all you need is glue and clamps, and you're ready to get started. But I've found it's a little more involved than that.

Along with glue, you're also going to need a way to apply it. I like to pour some glue into a tray and use a silicone brush to spread it on joint surfaces. When it comes to glue, I like to use liquid hide glue. It gives you more open time to get parts together before it sets.

In addition to those essentials items, I have a tape measure, mallet, and square for checking and adjusting the alignment of parts (upper left photo).

A roll of masking tape is also helpful. You can apply tape to inside corners and other places that will be difficult to access after assembly. This way, any glue squeezeout will end up on the tape and not on your project.

I also like to keep everything accessible, but where it isn't likely to get knocked around. The idea is that with everything close at hand, you can minimize extra steps once the glue goes on. You'll feel more relaxed and get better results.

**DRY RUN.** The next step is to gather the parts you'll assemble and bring them together with clamps, but without glue, as shown in the photo below. This practice run serves a few purposes. First, it lets you double-check the fit of all the joints. You have one last chance for fine-tuning before the glue goes on. Joints should fit snugly, surfaces should be flush, and there shouldn't be gaps.

The dry assembly process also gives you an idea of the time involved in assembling a complex project. If it takes longer than 10 minutes, you may need to consider breaking the process down into easier-to-manage stages.

Finally, the run through allows you to arrange the parts on your assembly area in the right order and orientation. This keeps the process going smoothly and prevents parts from getting mixed up — or forgotten.

**COLLECT YOUR CLAMPS.** Performing a dry assembly reveals the type and number of clamps you need to get the job done, as you can see in the upper right photo. Most of the time, long bar clamps or pipe clamps do the lion's share of the assembly work. But they aren't the only players on the team.

Small clamps serve as third hands. Use them to hold parts in alignment during glueup. They can even help support the assembly as you bring in longer clamps.

Another key part of applying clamping pressure is using cauls. These pieces direct and distribute clamping pressure right where it's needed, as shown in the main photo on the previous page. It's also a good idea to make sure your clamps are fitted with plastic pads to prevent your work from getting marred by metal clamp jaws. You can make pads from hardboard, as well.

As with your supplies, take some time to place the clamps nearby but out of the way of the assembly. This way, you can reach them easily once you start.

Now the moment is at hand. All your prep work pays off as you glue up your project. Take a deep breath, and get started knowing the results are in the bag. W

A final dry assembly is a critical part to success. You can double-check the fit and get a good idea of the best order. Once the pieces are together, apply clamps to make sure the joints close up and that the assembly will be flat and square.

# 7 strategies for Working with End Grain

▲ Keeping all of your cutting tools sharp will go a long way toward reducing the possibility of tearout on end grain.

It's usually pretty easy to achieve glass-smooth cuts when cutting with the grain of a piece of wood. The same can't always be said for making cuts in the end grain of a workpiece.

Whether cutting on a table saw, with a router, or even using a hand plane, it pays to take preventive measures (and sometimes extra steps) to avoid tearing out the fragile end grain and possibly spoiling a project part. Here are some of my favorite tricks to ensure perfect end-grain cuts every time.

## [1] Sharp Cutting Edges

Enough can't be said for starting out with sharp cutting edges. When making end grain cuts at the table saw, ensure that the blade is up to the task by making test cuts in a similar material. If the blade has recently been used for cutting a lot of MDF or other manufactured materials, it may be dull from the abrasives found in these items.

The same goes for router bits. If in doubt, send them out for a sharpening. Or, in the case of your hand plane, make sure you start with a freshly honed blade (left photo). This will pay dividends in the way of clean cuts.

## [2] Back it Up

All too often when cutting end grain, there's a tendency for the weaker fibers near the edge of a board to tear out as the blade exits the material. To avoid this, a backer board can be used to support this weak spot.

Whether routing a profile on the end of a board (main photo, previous page), or trimming the end grain with a hand plane (near right photo), a backer board provides the proper support. In most cases, you'll want the backer board to be the same thickness as the workpiece to prevent the tool from getting hung up. And make sure the boards are clamped solidly in place.

▲ Using a backer board (left photo) eliminates the possibility of tearout when the hand plane reaches the end of the board. Cutting a slight chamfer on the far edge of the workpiece (right photo) is another helpful strategy for reducing end-grain tearout.

## [3] Rout End Grain First

Another handy trick is to rout the end grain first. This is especially helpful when faced with the task of using a hand-held router to form a profile around the entire perimeter of a workpiece. This way, if there's a little tearout when the bit completes an end-grain pass, it'll be cleaned up when the long-grain edges are routed. Even so, you'll want to slightly slow your pace when approaching a corner to minimize the tearout risk.

## [4] Zero Clearance

Moving to the table saw, the use of a zero-clearance table saw insert and an auxiliary miter gauge fence are very helpful when making crosscuts near end grain. Shown in the photo at right, these two items used together act similar to backer boards to help keep tearout to a minimum.

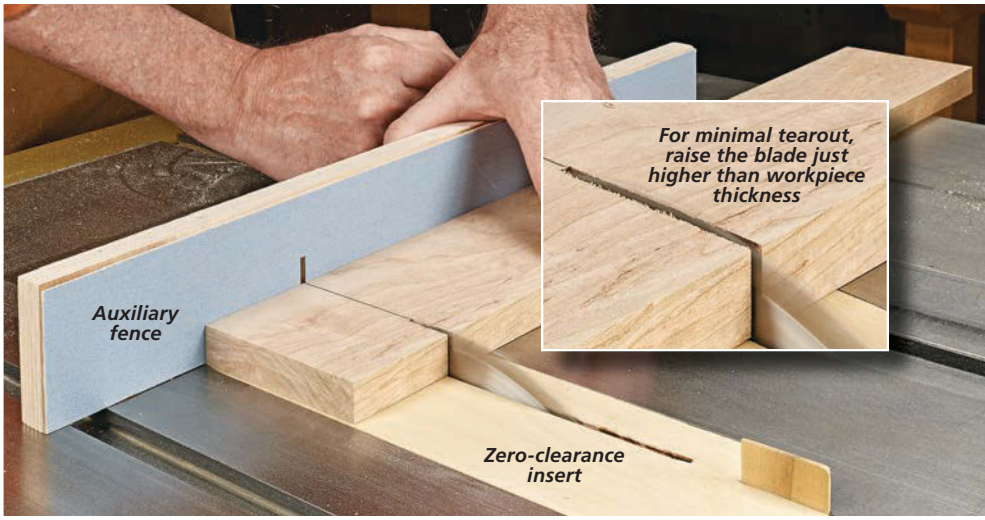


▲ Used in conjunction with one another, a zero-clearance table saw insert and an auxiliary miter gauge fence fully support the bottom face and back edge of a workpiece. This allows for glass-smooth cuts with minimal tearout.

## [5] Soften the Fibers

When using a hand plane, perhaps my favorite go-to method for getting smooth cuts on end grain is to slightly dampen the end grain, which softens the fibers as shown below. I prefer to use water for most applications, but mineral spirits works just as well. After the fibers soak up the water for just a few seconds, a plane removes material very easily.

▲ Dampen the end grain of a workpiece before planing. The water softens the wood fibers and allows for smoother cuts.

## [6] Keep a Low Angle

A hand plane with a bed angle of 45° or higher works well for planing face and edge grain. But when it comes to planing end grain, a low-angle plane is often easier to use.

The reason for this is simple. Planing end grain typically requires more force to move the plane across the workpiece than edge or face grain planing. With the lower blade angle, the force required is substantially reduced, resulting in a cleaner (and safer) process. It's certainly possible to plane end grain without using a low-angle plane, but once you try the low-angle method, you'll be hard-pressed to do it any other way.

## [7] Chamfer the End

My final secret for reducing tearout while planing end grain with a hand plane is to gently plane a slight chamfer on the far edge of the workpiece before planing across the end grain (upper right photo). By chamfering this edge, you not only eliminate tearout as the plane blade exits the workpiece, but you also create a target stopping point. Just be sure the chamfer doesn't remove more material than is necessary.

While this list doesn't include every end grain tip or trick, these are the ones I turn to most to create glass-smooth, tearout-free cuts. Just putting one or two of these methods into practice in your shop will go a long way toward making you a better woodworker. W

# making Stopped Cuts

Most table saw cuts follow a predictable routine. You feed a workpiece into the blade and continue in a fluid motion until the blade exits on the opposite side.

Breaking that routine by stopping a cut short opens up options for creating details with your table saw. There are some good reasons for choosing the table saw over a jig saw or band saw.

The main benefit is the straight, smooth cut you get with a table saw by guiding the workpiece with the rip fence. In addition, if you need to make multiple parts, a table saw ensures consistent cuts on each piece.

**TABLE SAW SETUP.** The secret to success lies in stopping the cut in the right place. This seems obvious, but something to keep in mind is that the end of the blade kerf isn't perfectly vertical. Instead, it's arced. The upper right drawing below shows what I'm talking about.

This means that the kerf you see on the top face of the workpiece isn't where the blade is cutting on the bottom face. So you could easily overshoot your layout lines and spoil the cut. One way to minimize this effect is to raise the blade to its full height. This makes the end of the kerf as vertical as possible.

Another element of the setup is a two-part layout. The first part is to make some reference marks on your table saw's rip fence that show the leading edge of the blade (drawings below). The other part is creating layout lines on the workpiece. Together these lines serve as a reference for knowing when to the stop the cut. Here are three tasks where making stopped cuts at the table saw makes sense.

**CORNER NOTCHES.** One common type of stopped cut is creating a large notch in the corner of a workpiece. Whether it's for a shop project or a furniture piece, I want the notch to look its best.

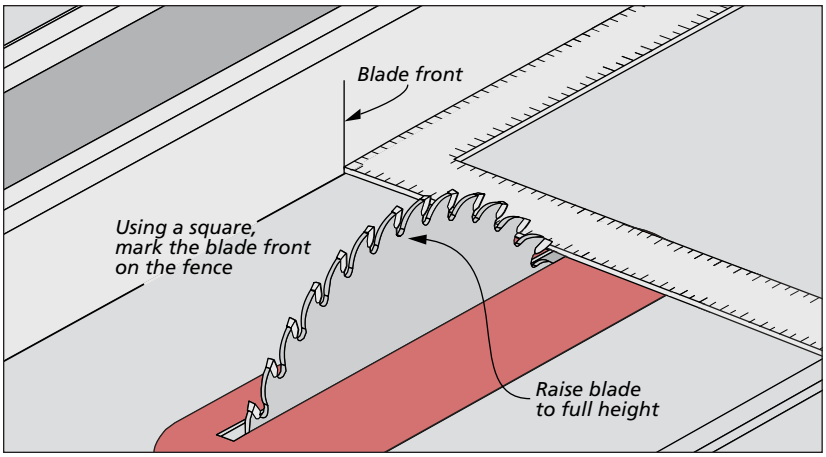


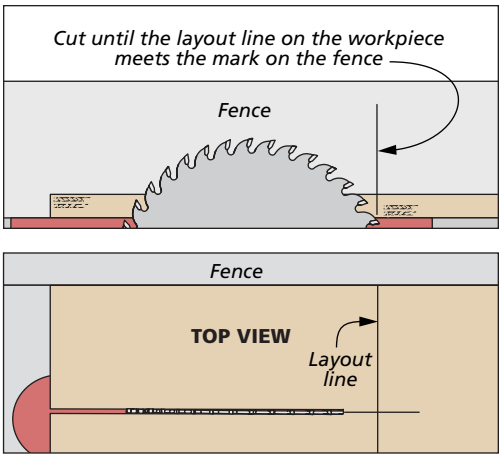

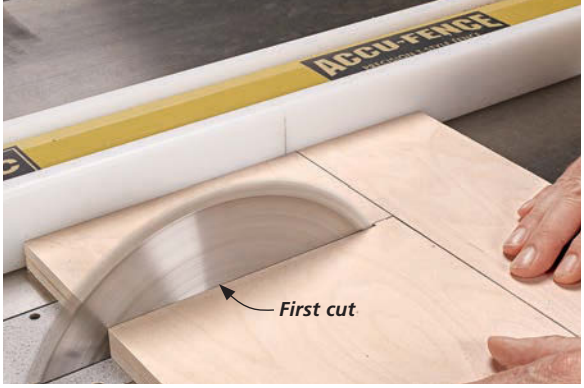


Slowly feed the workpiece into the blade and stop the first cut when the extended layout line meets the reference mark on the rip fence, before it reaches the blade.

Repeat the process for the second cut. A small amount of material in the corner keeps the waste piece attached. A hand saw (inset) makes quick work of completing the cut. Clean up the edges with a file and sandpaper.

The notch is created in two cuts. If the notch isn't square, I like to make the shorter of the two cuts first. Set the rip fence so the blade aligns with this layout line. Slide the workpiece into the blade and stop when the layout line aligns with the mark you made on the rip fence, as in the upper left photo.

On short cuts, it's no problem to retract the workpiece. But for longer cuts, you may want to turn off the saw and wait until the blade stops spinning to pull the workpiece back.

There's an important difference in making the second cut. The key is setting up so that the waste piece is on the outside of the blade. This may require that you flip the workpiece over, as in the upper right photo. Most likely, the waste piece will stay connected by a thin web of material. But in case it breaks free, you don't want it trapped between the fence and blade.

In order to complete the notch, you need to remove the remaining web of material. For that, I like to use a hand saw, as you can see in the inset of the upper right photo. The final cleanup is done with a file and some sandpaper.

**EDGE NOTCHES.** The main photo on the previous page shows another kind of notch. This one is cut in the middle of the edge of a panel rather than at a corner. These are often made to wrap around another component or accept an interlocking part. The technique for cutting is about the same. Make a saw cut to define each side of the notch. To remove the waste in the middle, use a jig saw to cut close to the end line. Then file and sand to clean up the edge as before.

**INSIDE ANGLES.** There's another application where I like to use stopped cuts. And that's for cutting inside angles on complex parts. One example of this is making the angled back leg of a chair (upper photo below). In general, the technique isn't much different from making a notch. However, you need to combine a couple of stopped cuts with a tapered through cut to complete the piece.

The three photos along the bottom of the page highlight the process. It starts by making a stopped cut at the table saw to define the lower portion of the leg.

The second cut incorporates a simple sled to hold the blank at an angle to cut the upper inside face. This creates a reference edge for the next cut.

Another stopped cut defines the final width of the upper portion of the leg. Here again, a hand saw completes the cut.

With a little know-how, you can quickly make smooth, accurate stopped cuts. Along the way, you've learned to get even more from your table saw. W

Two stopped cuts are required to create the angled rear edge on the back leg of a chair. Using a table saw allows you to get a clean cut with minimal cleanup.

A table saw can be used to make a smooth, straight cut along an inside corner of a long blank.

Double-sided tape secures the workpiece to a taper sled. This creates a reference edge for making the other stopped cut.

One final stopped cut does most of the work to create a smooth surface. You need to complete the cut with a hand saw.

# Shop Notes

## Router Dado Jig

There are a lot of dadoes and grooves to cut on the storage lockers (page 36). I usually cut dadoes at the table saw, but for this project, the parts were simply too big to manhandle. In this case, I placed the workpieces on the bench and relied on my hand-held router and a simple, shop-made dado jig.

**FOUR PARTS.** You can see in Figure 2 below how the dado jig is made up of four simple parts — two hardboard guides and a pair of cleats. The spacing between the guides is set by using a piece of the plywood from the project, as illustrated in Figure 1 below. This guarantees perfect-fitting dadoes when it comes time to assemble the project.

I started by cutting the hardboard to size. You may need to run the edges over a jointer to ensure straight, smooth edges for the router bit's bearing to follow. Any irregularity will be transfered to the dado, which can prevent a good fit.

**A PAIR OF CLEATS.** The cleats can be made from plywood or hardwood. Their purpose is to hold the guides in position at the proper spacing. They also help register the jig square to the edge of the plywood panel. I mounted each cleat on the opposite face from the other cleat. This way, you can use the jig to rout the stopped vertical grooves in the cabinet back and divider on the storage locker.

**USING THE JIG.** To use the jig, chuck a ½"-dia. pattern bit with a ½" depth of cut into your router (refer to page 38). These bits are commonly called dado cleanout bits. Simply make a pass along each of the inside edges of the guides.

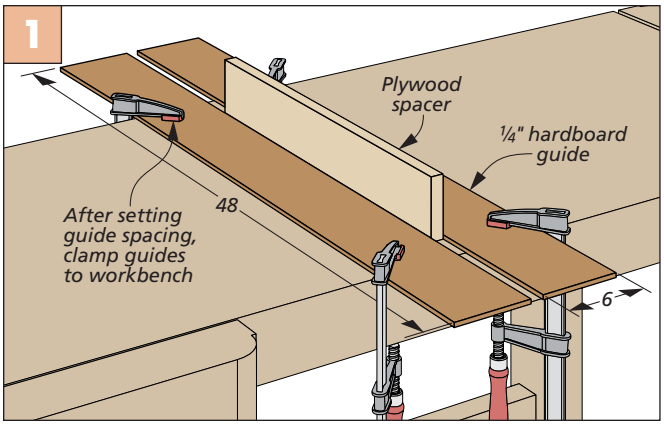


**Setting the Guide Spacing.** Use a piece of plywood from the project to set the spacing between the guides.

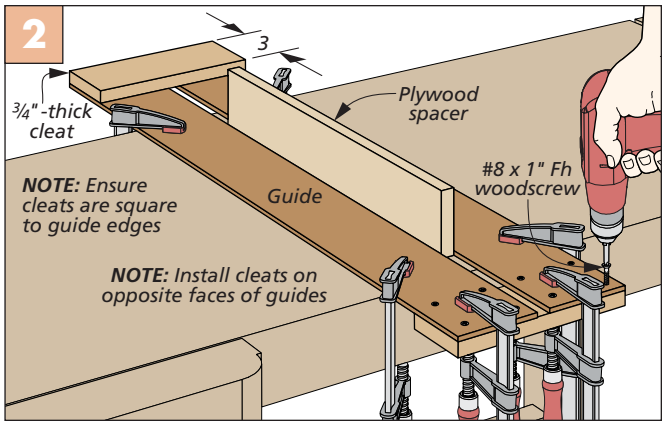


**Adding Cleats.** Secure a cleat at each end of the guides on opposite faces. Make sure they're square with the guides.

## Making a Handle

To create the handle for the storage lockers, I used a template. A template makes cutting and routing the outside shape and the internal hand-holds an easy task.

**HALF-TEMPLATE.** Start by making the half-template you see on the right. I used ¼" hardboard. You could also use plywood. Just make sure the template is at least ¼" thick to provide an adequate surface for the bearing on the flush-trim bit you'll use later. When making the template, take care to make all the edges smooth.

**ROUGH CUT & TRIM.** Now you can cut the blank for the handle slightly oversize. Draw a centerline down the middle to serve as a guide for positioning the template. Trace the hand-holds and outside shape onto the blank. Use a jig saw to remove the inside waste of the hand-holds and rough out the outside shape.

Attach the template with double-sided tape and use a pattern bit to clean up the edges. Flip the template to the other side of the blank and repeat the trimming process.

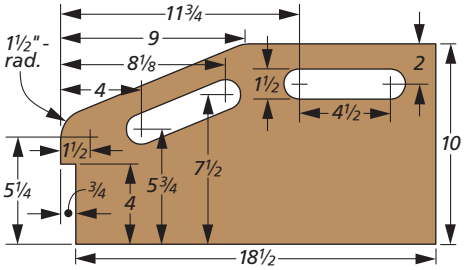


**Half-Template.** Create a hardboard template to use as a layout and flush-trimming guide for the handle.

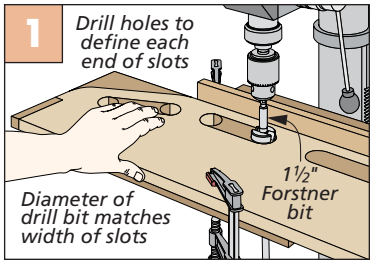


**Trace & Drill.** Use the template to trace the shape of the handle before drilling the hand-holds.

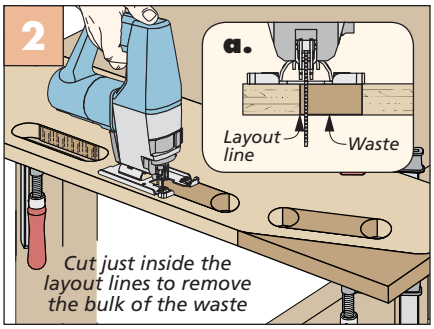


**Removing Waste.** Use a jig saw to remove the waste in the hand-holds and shape the outside of the handle.

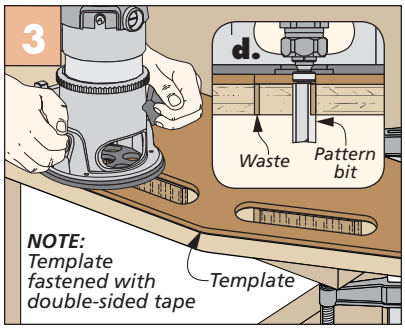


**Flush Trim.** Attach the template to trim the handle blank flush and to its final shape.

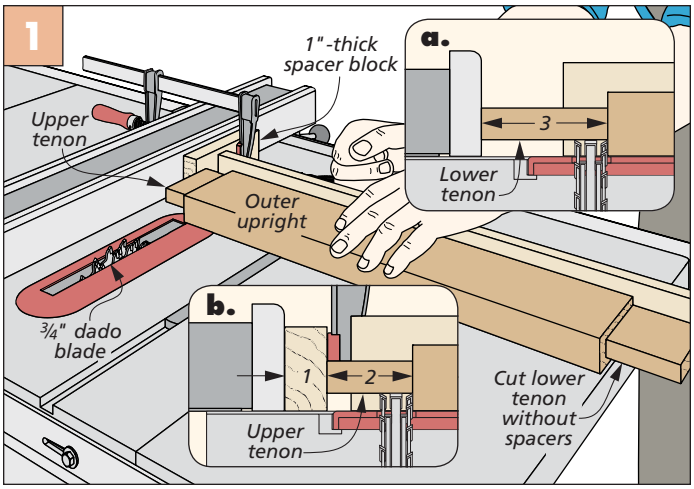


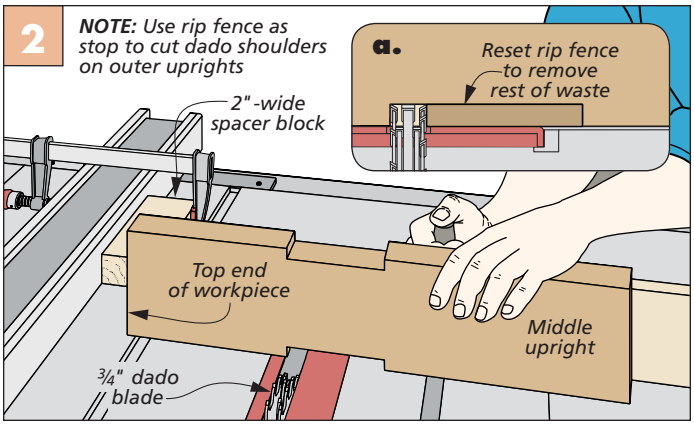


## Rip Fence Spacer Blocks

The farmhouse table (page 44) presented a couple of challenges at the table saw. One set of parts, the outer uprights, have lower tenons that are 1" longer than the upper tenons. I also needed dadoes in the edges of the outer uprights that aligned perfectly with dadoes in the edges of the middle uprights, even though these parts are different lengths. As it turned out, the solution for making both of these table saw cuts accurate and repeatable was to use spacer blocks clamped to the table saw rip fence.

**ACCURATE TENONS.** I cut the tenons on the outer uprights first. To make them, I started by setting the rip fence as a stop for cutting the shoulders of the lower tenons (Figure 1a). Next, I clamped a 1"-thick spacer block to the rip fence, well ahead of the blade, to serve as the stop for cutting the shoulders of the upper tenons (Figures 1 and 1b). By cutting the shoulders at these two positions, you'll end up with upper tenons 1" shorter than the lower tenons.

**ALIGNED DADOES.** A similar technique helps align the dadoes between the longer outer uprights and the shorter middle uprights. To account for the tenons on the outer uprights, I cut the dado shoulder in the outer uprights using the rip fence as a stop. Then, a 2"-wide spacer block positions the dado shoulder properly on the middle upright (Figure 2). After cutting the shoulders on all the parts, you can reset the rip fence for the next set of passes. Then make subsequent cuts on the outer uprights using the rip fence as a stop, and the middle uprights using the spacer block as a stop. Repeat the sequence until the dadoes are complete. W

# working with Aluminum

***I've often heard that you should never grind aluminum on a bench grinder. What's the reason for this?***

*Tommy Eastlick*
*La Mesa, California*

Do an internet search on "grinding aluminum," and you'll find all sorts of cautionary tales about shop fires and exploding grinding wheels — the kind of stuff that urban legends are born of. The explanations for these potential risks basically boil down to two theories.

**THERMITE.** The first is that if you use the same tool for grinding aluminum and steel or iron, the grinding dust from the different metals can combine to create thermite, a pyrotechnic composition that, when ignited, burns rapidly and at extremely high temperatures.

It's true that thermite is made from a mixture of aluminum dust and iron oxide (rust). But in order to create a thermite reaction, the conditions would have to be just right. You'd need the right ratio of aluminum dust to iron oxide, as well as an ignition source. In other words, it would take a "perfect storm" scenario.

**GLAZED WHEELS.** The second theory is that aluminum clogs the pores of the grinding wheel and causes the surface to become glazed. The heat generated during the grinding process causes the aluminum that's stuck to the wheel to expand, which in turn causes the grinding wheel to crack and disintegrate with violent force.

While there are reported cases of grinding wheels disintegrating, this can also be due to a damaged or defective wheel. It's hard to say with certainty that the aluminum is at fault.

There's one element of this theory that is definitely true, though — aluminum will quickly load up a grinding wheel. For me, this is reason enough not to grind aluminum. It's a sure way to ruin a perfectly good grinding wheel.

Aluminum is a gummy metal and will stick to the surface of the grinding wheel. It doesn't take long for the surface of the wheel to become so clogged that it no longer cuts. The only way to remedy this situation is to dress the wheel to remove the glazed surface. And the more you dress the wheel, the faster it wears away. So when it comes to shaping aluminum (or other non-ferrous metals, such as brass or copper), I prefer other methods.

**OTHER OPTIONS.** For small jobs, like deburring an edge after cutting a piece to size, a file works well. One way to keep the file from loading up with aluminum is to rub it with chalk before you begin filing. The chalk prevents the aluminum shavings from sticking to the teeth of the file.

For larger jobs, I usually turn to a powered sander, like a disc or belt sander. Unlike grinding wheels, there's more space between the abrasive particles on sanding belts and discs, so they don't tend to clog up as easily. But if they do, a crepe stick will usually remove any glazing. Another trick used by a lot of oldtimers is to rub a little beeswax onto the disc or belt beforehand. It also prevents the aluminum from sticking.

**DUST COLLECTION.** There's one safety precaution I take when sanding aluminum (or any metal) with a power sander. And that's to close the blast gate or disconnect the tool from any dust collection system. The reason for this is simple — I don't want a spark or hot metal particle to get pulled into the dust collector bag where it may ignite a pile of sawdust and start a shop fire.

Having some basic metalworking skills is a valuable asset to a woodworker. One of the keys to this is knowing the right tool for the job at hand, as well as how to use it. W

# hardware & supplies
# Sources

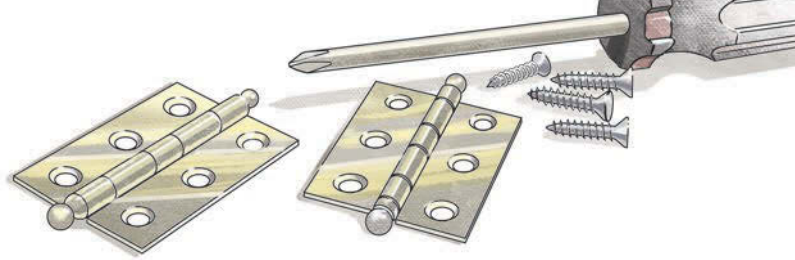

Most of the materials and supplies you'll need to build the projects are available at hardware stores or home centers. For specific products or hard-to-find items, take a look at the sources listed here. You'll find each part number listed by the company name. See the right margin for contact information.

### RUST PREVENTION *(p.10)*

- **Lee Valley**
  - *Anti-Corrosion Liner* . . 56Z61.33
  - *750g Silica Gel Canister* 56Z61.03
  - *40g Silica Gel Tin* . . . . . 56Z61.01
  - *Plane Sack* . . . . . 22P01.16
  - *Anti-Corrosion Emitter* 56Z61.20
  - *VCI Foam* . . . . . 56Z61.25
  - *Anti-Corrosion Bags* . . 56Z61.15
  - *GoldenRod Dehumid.* . . 56Z62.18
- **Dick's Sporting Goods**
  - *Cordless Dehumidifier* . . 22217006

### SPLINED EDGE JOINTS *(p.12)*

- **Infinity Cutting Tools**
  - *Slot-Cutting Master Set* . . 00-236
- **MLCS**
  - *Slot Cutter Set* . . . . . .8371
  - *Bearing Kit* . . . . . .234

### CORNER CLAMPS *(p.14)*

- **Rockler**
  - *Corner Clamping Jig* . . . . .58918
  - *Assembly Square* . . . . . .29190
  - *Bessey Angle Clamp* . . . . . .49957
  - *Irwin Angle Clamp* . . . . . .42801
  - *Bessey Strap Clamp* . . . . . .33861
  - *Corner Framing Clamp* . . .62674
- **Lee Valley**
  - *Web Clamp Corners* . . . 50K57.01
  - *Spring Clamp & Pliers* . . 17F84.03
  - *Miter Clip* . . . . . 17F84.10
  - *4-Way Speed Clamp* . . . 05F01.01
  - *Clamping Blocks* . . . . . 03F01.60
- **Kreg Tool**
  - *90° Corner Clamp* . . KHC-90DCC

### CANISTERS *(p.20)*

- **WidgetCo**
  - *Cork Stopper* . . . . 6-R56-XXX-CS

The 1/8"-thick cork sheet for the bottom of the canister is available at most craft stores. The entire set of mahogany canisters was finished with three coats of spray lacquer.

### VENEER PRESS *(p.26)*

- **McMaster-Carr**
  - *2¼" Coupling Nuts* . . 90264A241
  - *¾"-10 Threaded Rod* . . 90034A064
  - *¾" Flat Washers* . . . . 91083A036
  - *4" Comp. Springs* . . . . .9657K466
  - *¾"-10 Hex Nuts* . . . 90490A436
  - *3/16" Steel Rod* . . . . . .4416T91

### CHESSBOARD *(p.30)*

- **Homecraft Veneer**
  - *Holly Veneer* . . . . . varies
  - *Bloodwood Veneer* . . . . . varies
- **Lee Valley**
  - *Pivot Hinge* . . . . . 00H03.12
  - *Panel Magnet Cup* . . . . 99K32.72
  - *⅜" Rare-Earth Magnet* . . 99K32.03
  - *½" Magnet Washer* . . . 99K32.62
- **Rockler**
  - *Adhesive-Backed Felt* . . . . 22822
- **Veneer Supplies**
  - *Veneer Glue* . BBGLUEMEDIUM
- **Chess House**
  - *3" Chess Pieces* . . . . . G557BTL3
  - *1¼"-dia. Checkers Set* . . . .83124

I applied a coat of wiping varnish to warm up the color of the playing surface. Then the whole project was sprayed with two coats of satin lacquer.

### STORAGE LOCKER *(p.36)*

- **McMaster-Carr**
  - *5" Wheels* . . . . . .2781T17
  - *¾"-10 x 5" Bolts* . . . . 91236A855
  - *¾"-10 Lock Nuts* . . . 90640A320
  - *Door Pulls* . . . . . 1078A3
- **Woodworker's Hardware**
  - *Surface-Mount Hinges* . . .LAXX1

The doors were painted with *Aura* interior paint by *Benjamin Moore* in matte finish. The color is *Sylvan Mist* (CSP-740). The interior was finished with two coats of lacquer.

### RUSTIC TABLE & BENCH *(p.44)*

- **Rockler**
  - *Leaf Locks* . . . . . 21585
  - *5/16"-18 Threaded Inserts* . . 28811

The table and bench were distressed by rounding some edges using files, rasps, and sandpaper. Then it was stained with *Varathane Gunstock* oil-based stain. When the stain dried, the table was sanded back with open-mesh sandpaper. I sanded heavier on edges, ends, and corners. Next, I applied a coat of *General Finishes Van Dyke Brown* glaze and wiped it off quickly with a damp rag. Finally, I brushed on two coats of satin polyurethane.

Get the all-new *Woodsmith* Magazine Library DVD! This computer DVD contains every page of our first 222 issues. The DVD is fully searchable and printer-friendly. Plus, you get online access to every issue, as well. Learn more at Woodsmith.com!
Magazine Library DVD: ..... $99

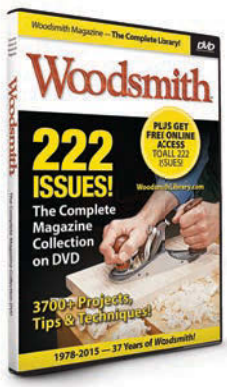


## MAIL ORDER SOURCES

*Project supplies may be ordered from the following companies:*

**Woodsmith Store**
800-444-7527

**Rockler**
800-279-4441
rockler.com

**Benjamin Moore**
855-724-6802
benjaminmoore.com

**Chess House**
800-348-4749
chesshouse.com

**Dick's Sporting Goods**
877-846-9997
dickssportinggoods.com

**General Finishes**
generalfinishes.com

**Homecraft Veneer**
800-796-6348
homecraftveneer.com

**Infinity Cutting Tools**
877-872-2487
infinitytools.com

**Kreg Tool**
800-447-8638
kregtool.com

**Lee Valley**
800-871-8158
leevalley.com

**McMaster-Carr**
630-833-0300
mcmaster.com

**MLCS**
800-533-9298
mlcswoodworking.com

**Varathane**
rustoleum.com

**Veneer Supplies**
veneersupplies.com

**WidgetCo**
800-877-9270
widgetco.com

**Woodworker's Hardware**
800-383-0130
wwhardware.com

# looking inside
# Final Details

▲ *Classic Chessboard.* As fun to use as it is to build, this great-looking chessboard is sure to be a hit on game night. The board is made with contrasting veneers. And the box-jointed case provides storage for chess pieces, as well as checkers. Turn to page 30 to get started.

▲ *Turned Canisters.* Sharpen your turning skills by firing up your lathe and giving these containers a try. The 12-sided vessels are turned to add the neck profile. Three sizes are available to give as gifts or use in your own home. All the details start on page 20.

▼ *Farmhouse Table & Bench.* This dining table takes a classic trestle design and gives it a rustic flair. It's built from low-cost lumber with a unique distressed finish. The table and bench plans begin on page 44.

▲ *Rolling Storage Lockers.* Every shop or garage could use more storage, and these roomy plywood organizers offer the perfect solution. Each one adds 50 cubic feet of storage, and they roll easily on heavy-duty wheels. Refer to page 36 for more.